P140 Pressure Regulator

- Versatile
- Control Accuracy
- Compact Design

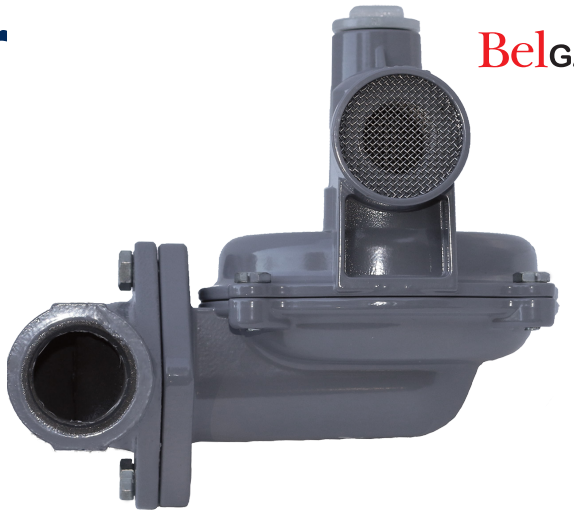

The Type P140 pressure regulator is ideal for natural gas, air, propane and general purpose gas pressure regulation. Uses include commercial, residential and light industrial for burners and unit heaters. Available with or without internal relief. The P140 is ANSI B109.4 compliant.

Applications

Applicable to a wide range of gaseous fluids, including air, natural gas and propane. Can be used as a LP regulator.

Materials of Construction

	P140
Body, Bonnet	Iron, Aluminum
Diaphragm	Nitrile
Diaphragm Assembly	Nitrile
Gaskets	Nitrile
Vent screen	Stainless Steel
Spring	Zinc-Plated Steel
Diaphragm Piston	Zinc-Plated Steel

Max Inlet Pressure (PSIG)

Orifice	Standard
1/8	125
3/16	125
1/4	60
5/16	35
3/8	20
1/2	10

Specifications

	P140	
Inlet / Outlet	3/4" x 3/4", 3/4" x 1", 1" x 1", 1-1/4" x 1-1/4"	
Maximum allowable inlet pressure	See Chart	
Temperature Range	-20˚F to 150 ˚F	
Approximate Weight	4 lb.	1.8 kg.

Standard Orientation: Angle | Straight

See pages 5 & 6 for the full orientation charts

P140 Part Matrix

P140										
										Version
	R									Relieving
	0									Non-Relieving
										Port Size (Inlet X Outlet)
		06								3/4" NPT
		07								3/4" x 1" NPT
		08								1" NPT
		12								1-1/4" NPT
										Body Construction
			0							Straight
			1							90 Degree Angle
										Spring Range
										WC / mBAR
				007						5" - 7" / 12 - 17
				008						6" - 8" / 15 - 20
				014						8" - 14" / 20 - 35
				016						6" - 16" / 15 - 40
				028						12" - 28" / 30 - 70
										PSIG / mBAR
				002						1 - 2 / 69 - 137
				004	**Red Cap**					2 - 4 / 137 - 276
				005						4 - 5 / 276 - 345
										Relief Spring
					0					Non Relieving
					5					5" WC Above Set
					6					6" WC Above Set
					7					7" WC Above Set
					9					9" WC Above Set (Standard)
										Orifice
						1				1/8" x 3/16"
						2				1/8"
						3				3/16"
						4				1/4"
						5				5/16"
						6				3/8"
						8				1/2"
						9				1/2" x 9/16"
										Port Orientation
							1			Up
							2			Down
							3			Right (Standard)
							4			Left
										Bonnet Orientation
								C		12 O'Clock
								D		3 O'Clock
								E		6 O'Clock (standard for angled body)
								F		9 O'Clock (standard for straight body)

P140 Flow Capacities in SCFH of 0.6 Specific Natural Gas

Outlet Pressure, Spring Part No., Accuracy	NPT 3/4" Outlet Body Size								NPT 1" Outlet Body Size						NPT 1-1/4" Outlet Body Size					
	Inlet		Orifice						Orifice						Orifice					
	PSIG	BAR	1/8"	3/16"	1/4"	5/16"	3/8"	1/2"	1/8"	3/16"	1/4"	5/16"	3/8"	1/2"	1/8"	3/16"	1/4"	5/16"	3/8"	1/2"
7" WC Set Pressure 655-791-001 Brown 1" WC Droop	0.5	0.04	56	72	82	160	200	260	66	92	140	180	215	275	66	92	140	180	305	305
	1	0.07	61	87	180	250	280	365	82	145	210	280	305	410	82	145	310	325	330	450
	3	0.20	102	289	320	450	530	500	172	315	355	510	580	810	172	340	435	520	590	810
	5	0.30	208	375	450	602	715	806	218	405	510	730	830	1110	310	480	510	730	880	1110
	10	0.70	320	590	800	940	1090	1320	345	630	860	1110	1310	1555	350	710	860	1150	1520	1575
	15	1.00	380	750	1000	1320	1425		428	855	1210	1555	1650		525	980	1210	1565	1760	
	20	1.40	500	1046	1320	1510	1510		550	1110	1450	1855	2010		610	1250	1555	2070	2415	
	40	2.80	795	1600	1905				845	1750	2210				940	1755	2505			
	60	4.10	1000	2005	2110				1155	2310	2505				1270	2505	2505			
	100	6.90	1700	2110					1805	2505					1910	2505				
	PSIG	BAR	1/8"	3/16"	1/4"	5/16"	3/8"	1/2"	1/8"	3/16"	1/4"	5/16"	3/8"	1/2"	1/8"	3/16"	1/4"	5/16"	3/8"	1/2"
14" WC Set Pressure 655-791-003 Silver 2" WC Droop	2	0.14	75	200	270	390	400	555	70	220	305	435	460	830	140	210	330	395	460	830
	5	0.34	155	360	500	630	660	885	235	395	560	720	750	1230	235	395	560	720	750	1350
	10	0.69	350	550	750	965	1000	1230	375	610	825	1055	1140	1660	375	610	825	1120	1195	1720
	15	1.00	420	720	900	1255	1350		460	810	1080	1350	1475		375	810	1135	1375	1650	
	20	1.40	565	900	1250	1430	1575		610	1020	1330	1640	1810		630	1020	1395	1680	2025	
	30	2.10	745	1240	1550	1755			805	1350	1760	1955			815	1490	2075	2320		
	60	4.10	1230	1955	2210				1310	2255	2505				1330	2750	3420			
	80	5.50	1555	2300					1905	2580					1960	3435				
	100	6.90	1645	2500					2200	2710					1960	4020				
	125	8.60	2000	2700					2200	2905					2260	4320				
	PSIG	BAR	1/8"	3/16"	1/4"	5/16"	3/8"	1/2"	1/8"	3/16"	1/4"	5/16"	3/8"	1/2"	1/8"	3/16"	1/4"	5/16"	3/8"	1/2"
1 PSIG Set Pressure 655-791-003 Silver 1% Droop	2	0.14	95	220	270	290	380	410	85	235	305	340	430	460	140	295	330	340	430	520
	5	0.34	200	345	440	590	630	720	235	395	500	660	715	800	280	400	520	665	715	800
	10	0.69	330	525	700	870	1000	1000	370	580	780	1025	1135	1150	370	590	780	1035	1150	1280
	15	1.00	420	735	950	1200	1300		465	770	1055	1280	1420		465	790	1075	1280	1435	
	20	1.40	520	900	1200	1400	1620		580	990	1355	1560	1730		580	1020	1370	1590	1730	
	30	2.10	700	1150	1640	1750			800	1340	1860	2020			800	1365	1890	2040		
	60	4.10	1200	1920	2250				1280	2410	2860				1280	2580	2900			
	80	5.50	1550	2110					1705	2900					1720	3400				
	100	6.90	1660	2150					1905	3155					1935	3420				
	125	8.60	1770	2160					2105	3310					2210	3620				
	PSIG	BAR	1/8"	3/16"	1/4"	5/16"	3/8"	1/2"	1/8"	3/16"	1/4"	5/16"	3/8"	1/2"	1/8"	3/16"	1/4"	5/16"	3/8"	1/2"
2 PSIG Set Pressure 655-791-004 Yellow/Black 1% Droop	5	0.34	125	205	260	360	380	300	130	225	290	410	420	485	130	180	250	280	300	395
	10	0.69	210	340	440	690	690	850	235	375	490	735	760	850	260	420	585	755	775	870
	15	1.00	270	450	600	900	900		310	505	655	1010	1010		370	530	67	1060	1120	
	20	1.38	340	550	760	1080	1080		375	610	850	1210	1210		430	625	860	1290	1320	
	30	2.10	450	850	1100	1450			510	905	1240	1620			535	930	1250	1720		
	60	4.10	880	1500	2040				960	1620	2250				960	1660	2300			
	80	5.52	1100	1910					1210	2010					1290	2110				
	100	6.90	1430	1910					1600	2410					1720	2490				
	125	8.60	1760	2115					2110	3320					2150	3420				
	PSIG	BAR	1/8"	3/16"	1/4"	5/16"	3/8"	1/2"	1/8"	3/16"	1/4"	5/16"	3/8"	1/2"	1/8"	3/16"	1/4"	5/16"	3/8"	1/2"
5 PSIG Set Pressure 655-791-006 White 1% Droop	10	0.69	125	155	200	275	290	580	120	155	225	245	305	335	180	250	310	375	450	660
	15	1.00	125	155	200	275	290		135	170	230	290	335		160	205	270	310	380	
	20	1.38	140	175	240	275	350		165	200	270	315	390		165	235	330	370	450	
	30	2.10	170	225	290	360			200	270	330	415			225	330	420	435		
	60	4.10	180	350	500				300	400	555				355	455	600			
	80	5.52	300	420					370	490					490	640				
	100	6.90	380	520					430	590					500	700				
	125	8.60	450	620					515	710					650	870				

P140 Relief Performance Curves

1" outlet, 1" vent port, 7" WC regulator set point

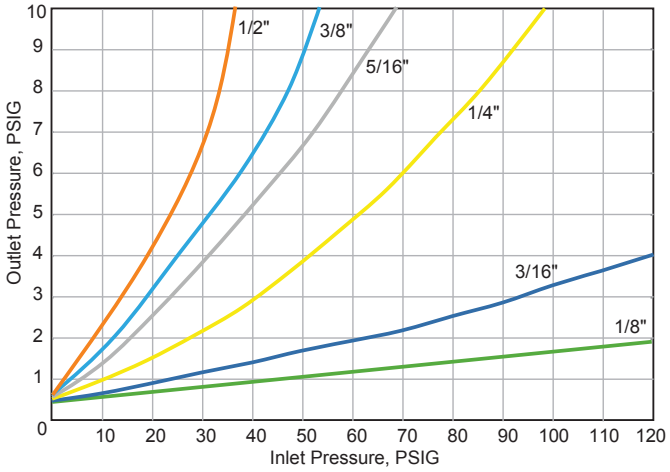

1" outlet, 1" vent port, 14" WC regulator set point

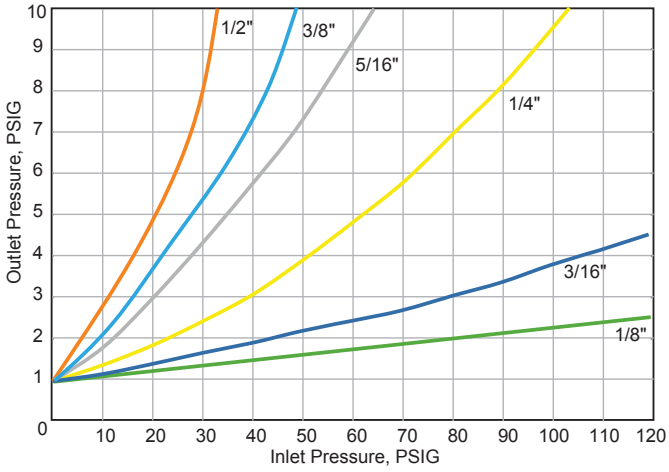

1" outlet, 1" vent port, 1 PSIG regulator set point

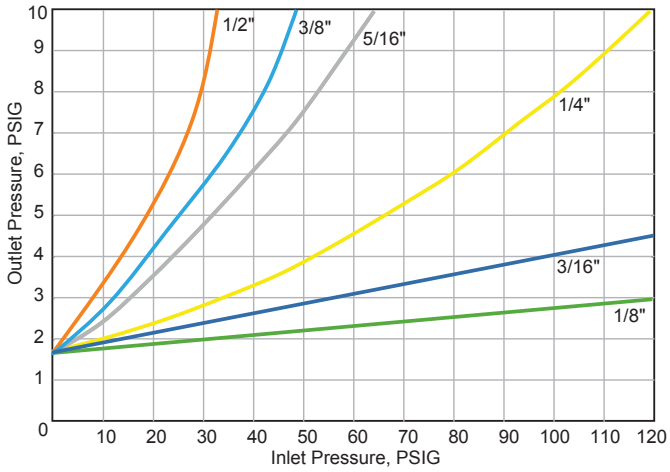

1" outlet, 1" vent port, 2 PSIG regulator set point

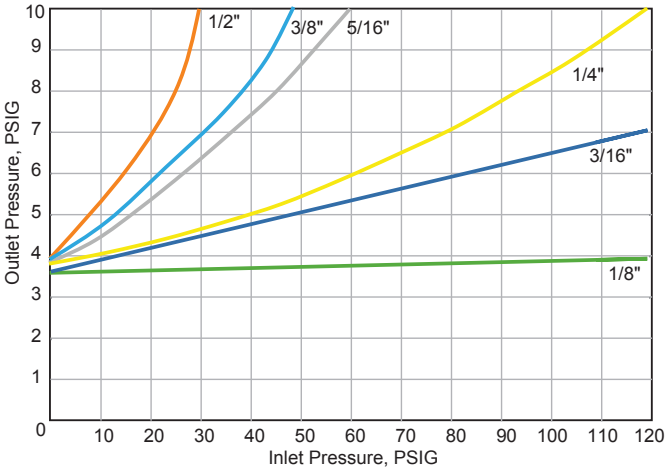

1" outlet, 1" vent port, 5 PSIG regulator set point

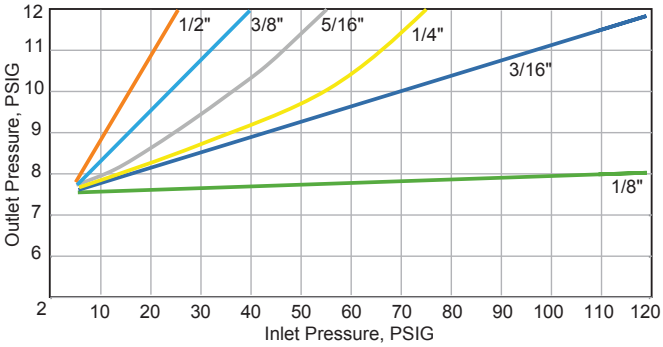

P140 Standard Parts

Item	Description	Qty.	Part Number
1	Bonnet Cap w/ gasket	1	812-035-000
	Red Bonnet Cap w/ gasket	1	812-036-000
	Bonnet (5"-7" up to 1-2 psi)	1	604-291-000
	Bonnet (2-4 psi up to 4-5 psi)		604-292-000
2	Adjustment Screw - 5" to 2 PSIG	1	648-581-000
	Adjustment Screw - 2 to 5 PSIG		648-581-001
3	**Range Springs**	1	
	5"-7" WC, Green		655-791-000
	6"-8" WC, Brown		655-791-001
	8"-14" WC, Blue		655-791-002
	6"-16" WC, Dark Green		655-791-007
	12"-28" WC, Silver		655-791-003
	1-2 PSIG, Yellow/Black		655-791-004
	2-4 PSIG, Yellow		655-791-005
	4-5 PSIG, White		655-791-006
4	**Aluminum Orifices**	1	
	Orifice - 1/8"		688-076-000
	Orifice - 1/8" x 3/16"		688-076-007
	Orifice - 3/16"		688-076-001
	Orifice - 1/4"		688-076-002
	Orifice - 5/16"		688-076-003
	Orifice - 3/8"		688-076-004
	Orifice - 1/2"		688-076-005
	Orifice - 1/2" x 9/16"		688-076-006
5	**Cast Iron Bodies**	1	
	Iron Body - 3/4" NPT straight		664-449-000
	Iron Body - 3/4" NPT angle		664-450-000
	Iron Body - 3/4" x 1" NPT straight		664-451-000
	Iron Body - 3/4" x 1" NPT angle		664-452-000
	Iron Body - 1" NPT straight		664-453-000
	Iron Body - 1" NPT angle		664-454-000
	Iron Body - 1 1/4" NPT straight		664-455-000
	Iron Body - 1 1/4" NPT angle		664-456-000
6	**Relief Springs**	1	
	5" above set, Orange		655-792-000
	6" above set, Red		655-792-001
	7" above set, Purple		655-792-002
	9" above set, Black		655-792-003
7	Seat assembly - Nitrile	1	650-204-000
8	Steel Build Bolt (Not Shown)	4	648-587-000
9	Steel Body Bolt (Not Shown)	2	648-587-001
10	Body Gasket	1	624-112-000
11	Non-relieving Diaphragm Assembly		804-296-000
	Relieving Diaphragm Assembly - 5"	1	804-297-000
	Relieving Diaphragm Assembly - 6"	1	804-297-001
	Relieving Diaphragm Assembly - 7"	1	804-297-002
	Relieving Diaphragm Assembly - 9"	1	804-297-003

P140 Dimensions

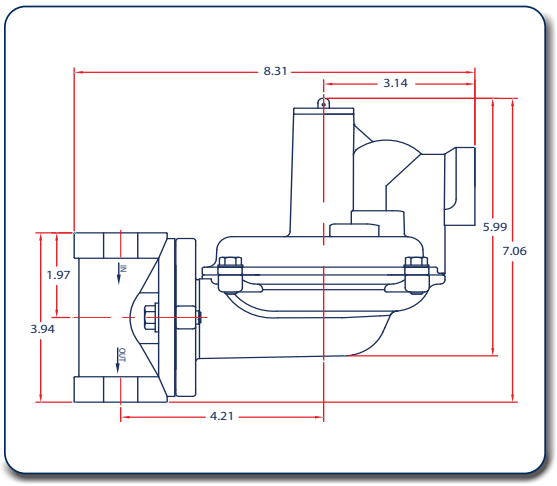

P140 Angle Body Dimensions

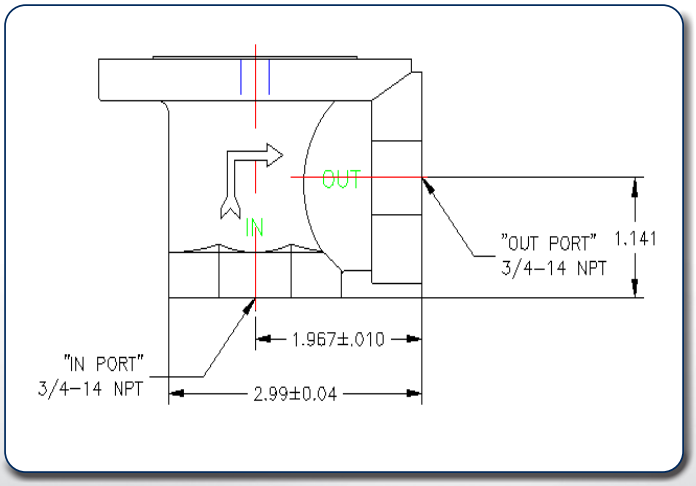

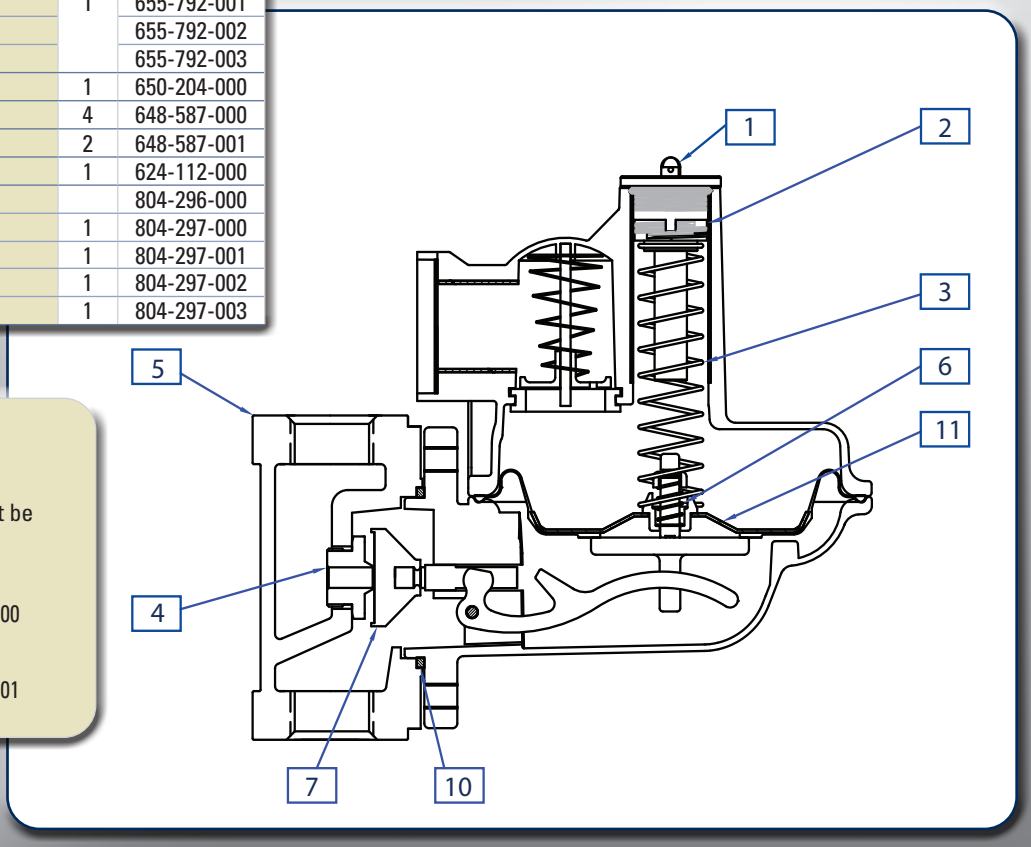

Notice:
When changing a lower pressure P140 to a higher pressure unit, the bonnet and adjustment screw must be change as well.

5"-7" up to 1-2 psi spring ranges use;
Bonnet 604-291-000 Adjust 648-581-000

2-4 psi up to 4-5 psi spring ranges use;
Bonnet 604-292-000 Adjust 648-581-001

VENT/BODY ORIENTATIONS BELGAS STRAIGHT BODY REGULATORS

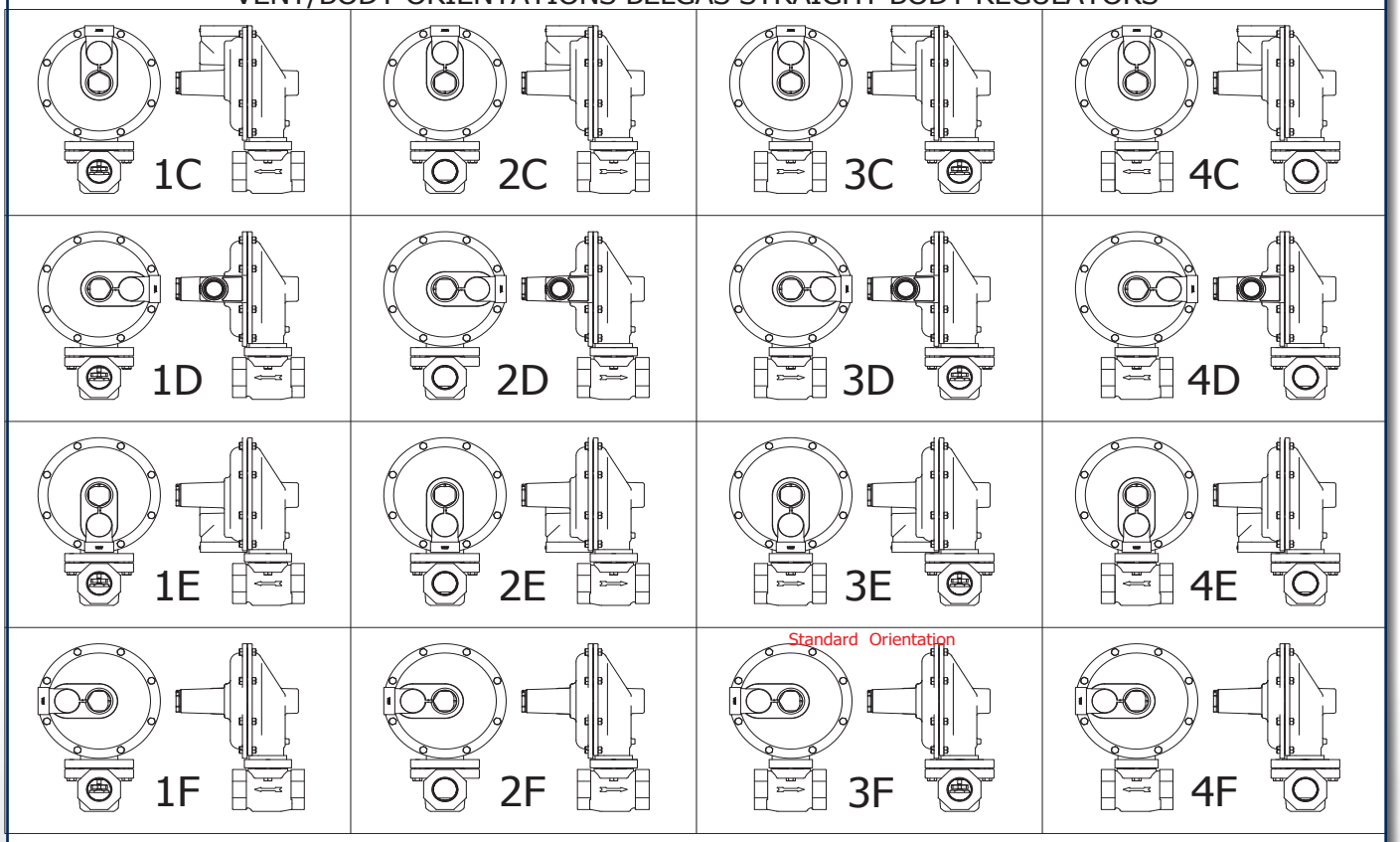

NUMBER = BODY ORIENTATION, 1-UP, 2-DOWN, 3-RIGHT, 4-LEFT

LETTER = VENT CLOCK POSITION, C-12, D-3, E-6, F-9

Angle Body Orientations

VENT/BODY ORIENTATIONS BELGAS ANGLE BODY REGULATORS

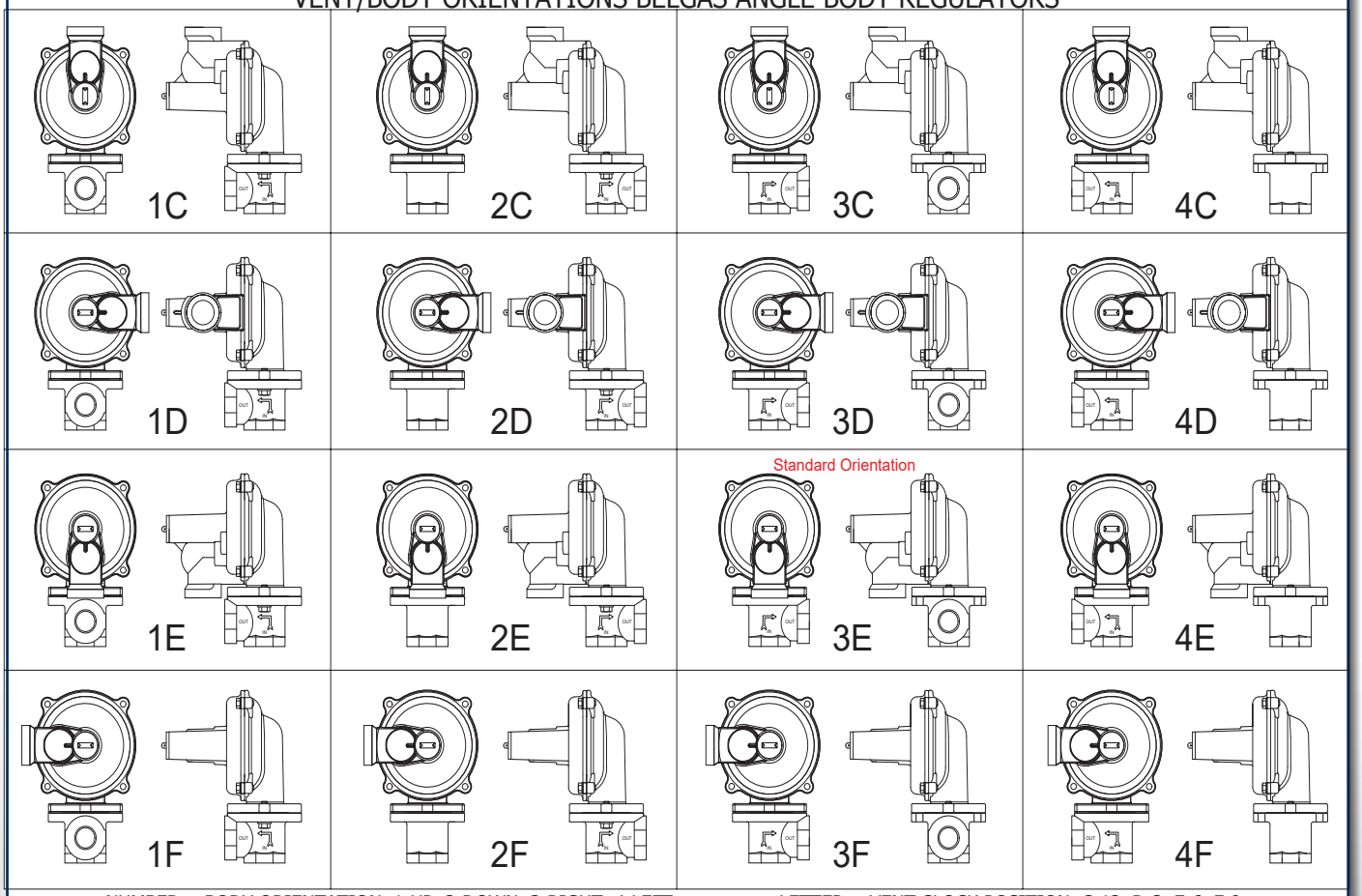

NUMBER = BODY ORIENTATION, 1-UP, 2-DOWN, 3-RIGHT, 4-LEFT

LETTER = VENT CLOCK POSITION, C-12, D-3, E-6, F-9