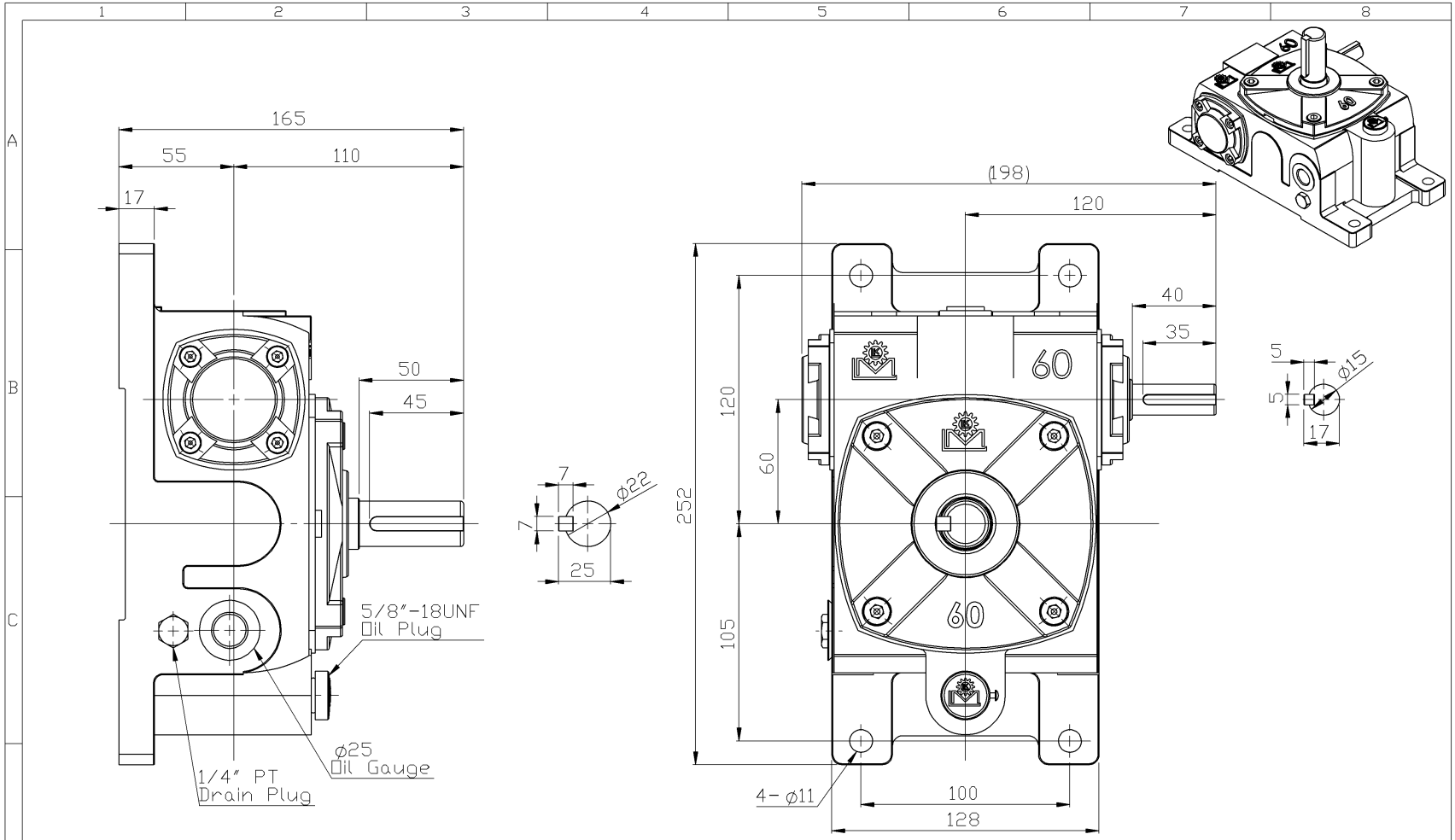

LIMING LI MING MACHINERY CO., LTD.	VARIETY OUTLINE DIMENSION	POWER 1/2HP,1/4HP		APPROVED	DATE	NO	REVISION	REVISER	DATE
	DRAWING NO. VW60L-15	PATH		EXAMINED	DATE				
TITLE WORM REDUCER	MODEL VW60	STAGE 1	VERSION 01	CHECKED	DATE				
	RATIO 1/10~1/60	UNIT mm		DRAWN Bo-Kai	DATE 2016/11/16				

D:\epdm\lmpdm\solidworks\lm2\as\

製圖	陳柏凱 16/11/17	資材	巫宗翰 17/08/31	生產	林明皇 17/09/07	審核	張正益 17/09/15	受圖	吳汝美 17/10/06	核准	林秋盛 17/09/15