ENAPART

93 S Railroad Avenue Unit C
Bergenfield NJ 07621 USA
www.enapart.com
sales@enapart.com

Friedrich-Ebert-Anlage 36, 60325
Frankfurt am Main, Germany
www.enapart.de
anfrage@enapart.de

〒584-0023　大阪府富田林市若松町
東2丁目2番16号
www.enapart.co.jp
sales@enapart.co.jp

Via del Canneto 35,
Borgosatollo, Brescia - Italia
www.enapart.it
vendite@enapart.it

4 boulevard Carnot, 95400
villiers-le-bel, Paris, France
www.enapart.fr
sales@enapart.fr

PLAZA NUESTRA SEÑORA DE LAS
NIEVES 12 ,LOCAL ,50012,ZARAGOZA
www.enapart.es
ventas@enapart.es

Barbaros Mah. Ihlamur Bul. Ağaoğlu
My Newwork No:3/15 Ataşehir / İstanbul
www.enapart.net
satis@enapart.net

65049, ОДЕСА, ВУЛИЦЯ ІВАНА
ФРАНКА, БУДИНОК 55, ПОВЕРХ 3
www.enapart.com.ua
sales@enapart.com.ua

Складова база „Онгъл“, Склад А2, п.к.
4006, гр. Пловдив, България
www.enapart.bg
sales@enapart.bg

PRIVADA 10 B SUR #3908 COL.
ANZUREZ, C.P. 72530, PUEBLA,PUE
www.enapart.com.mx
sales@enapart.com.mx

MUNICIPIUL BUCUREŞTI, SECTOR 3,
B-DUL BASARABIA, NR.250, CORP P+5
www.enapart.ro
sales@enapart.ro

3 Austin Mews, High Street, Hemel
Hempstead, HP1 3AF , United Kingdom
www.enapart.co.uk
sales@enapart.co.uk

SCHEDE TECNICHE PRODOTTI
PRODUCTS DATA SHEETS

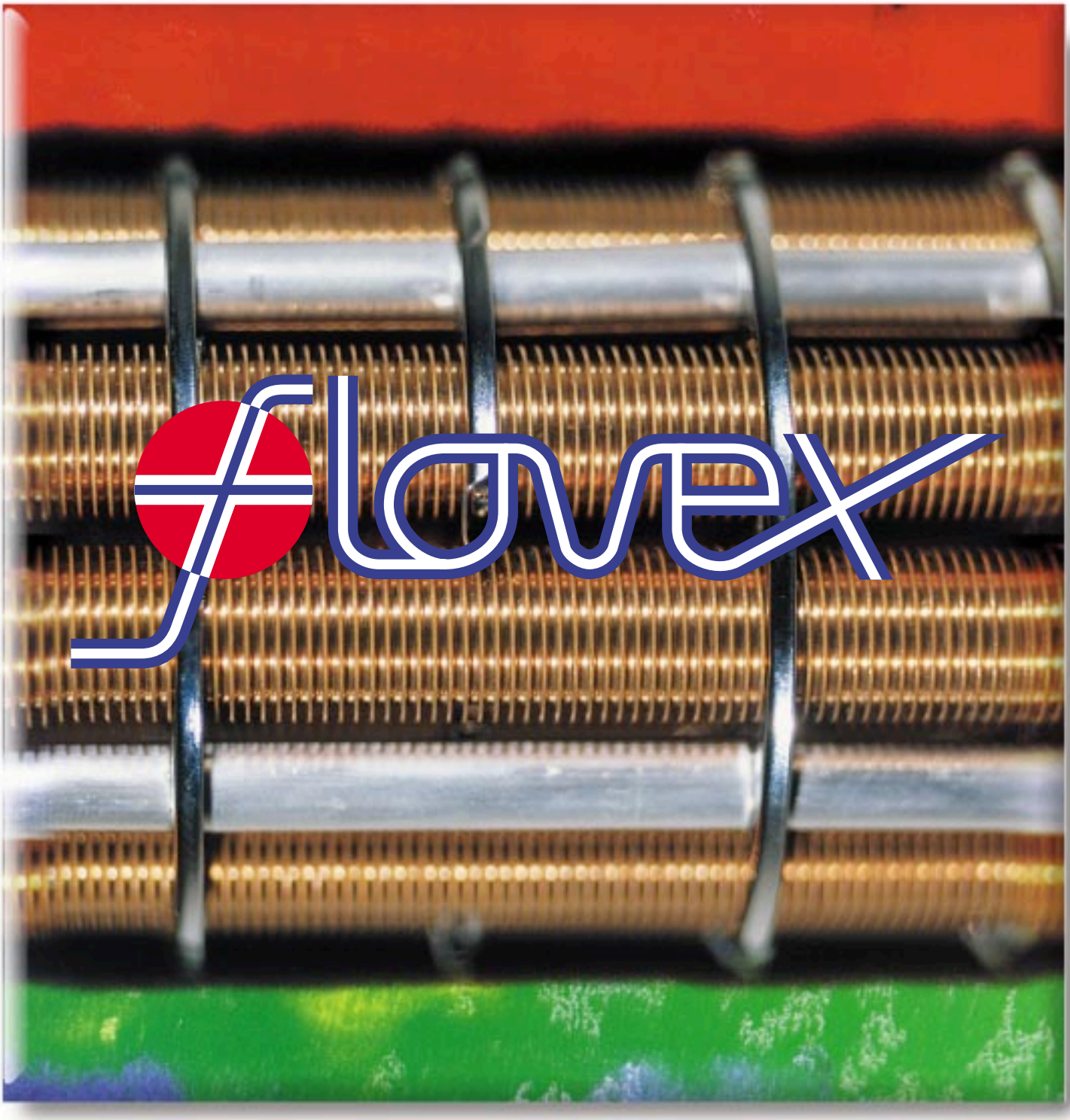

FLOVEX

FLOVEX S.p.A.
Via Abruzzi, 4/6 - 20056 GREZZAGO (MI) - ITALY
Tel.: + 39 02 920192.1 r.a. - Fax: +39 02 92019239
e-mail: flo@flovex.it - www.flovex.it

FLOVEX S.p.A.
Via Abruzzi,4/6
20056 GREZZAGO (MI) - ITALY
Tel.: +39 02 9512611 r.a. - Fax: +39 02 95126139
E-mail: flo@flovex.it - www.flovex.it

La **FLOVEX** nello stabilimento di Grezzago, alle porte dell'hinterland di Milano, realizza, con le più aggiornate tecnologie e materiali, esclusivamente apparecchi per la soluzione di ogni problema di scambio termico.

In the factory at Grezzago, just outside the doors of Milan, ***FLOVEX*** *solves almost all problems of heat transfer, using uptodate tecnologies and materials.*

ORGANIZZAZIONE COMMERCIALE EUROPEA
Europe sales organization

GERMANIA - **WIDLER GmbH**
Neusser Str. 13 - 41061 MONCHENGLADBACH 1
Tel. 0049/2161/960287 - Fax 0049/2161/960289

SPAGNA - **OLAER OILTECH IBERICA S.A.**
Travesia Industrial 29 - L'HOSPITALET DE LLOBREGAT
08907 BARCELLONA
Tel. 0034/93/3361412 - Fax 0034/93/3357186

FRANCIA - **OLAER INDUSTRIES S.A.**
16 Rue De Seine - 97200 COLOMBES
Tel. 0033/1/41191700 - Fax 0033/1/41191720

SVIZZERA - **OLAER SCHWEIZ A.G.**
Bonnstrasse 3 - 3186 DUDINGEN
Tel. 0041/26/4927000 - Fax 0041/26/4927070

AUSTRIA
OLAER SPEICHER TECHNIK GESELLSCHAFT GmbH
Haiderstrasse 38 - 4052 ANSFELDEN
Tel. 0043/7229/80306 - Fax 0043/7229/8030621

BELGIO - **S.A. OLAER BENELUX N.V.**
Doornveld 4 - 1731 ZELLIK
Tel. 0032/2/4661515 - Fax 0032/2/4661624

OLANDA - **OLAER NEDERLAND B.V.**
P.O. BOX 75 - 4840 AB PRINSENBEEK
Tel. 0031/76/5412453 - Fax 0031/76/5411502

INGHILTERRA
OLAER FAWCETT CHRISTIE HYDRAULICS Ltd.
Sandycroft Industrial Estate Chester Road Sandycroft
DEESIDE CLWYD CH5 2QP
Tel. 0044/1244/535515 - Fax 0044/1244/533002

AUSTRALIA -
OLAER FAWCETT CHRISTIE HYDRAULICS Ltd.
13 Boola Place - CROMER NSW 2099
Tel. 0061/2/99816888 - Fax 0061/2/99816144

PEP. CECA - **OLAER CZ s.r.o.**
Videnska 125 - 63900 BRNO
Tel. 00420/5/47125601 - Fax 00420/5/47125600

GRECIA - **INDUSTRIAL TECHNOLOGIES S.A.**
33 Ioanninon Str. - GR 104 44 ATENE
Tel. 0030/1/5151723 - Fax 0030/1/5151725

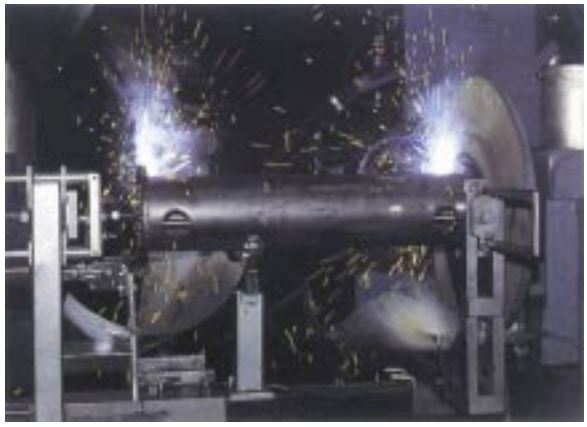

Dimensioni e caratteristiche non impegnative. Tolleranze secondo norme. - *Dimensions and characteristics of the catalogue are subject to change without notice. Clearances according to international standards.*

SHEET 2001.

DET NORSKE VERITAS

QUALITY SYSTEM CERTIFICATE

Certificate No. ***CERT-02671-98-AQ-MIL-SINCERT***

Si attesta che / This is to certify that

IL SISTEMA QUALITA' DI / THE QUALITY SYSTEM OF

FLOVEX S.p.A.

Via Carlo Porta, 5/11 - 20064 Gorgonzola (MI) - Italy

E' CONFORME AI REQUISITI DELLA NORMATIVA
HAS BEEN FOUND TO CONFORM TO THE QUALITY SYSTEM STANDARD

UNI EN ISO 9001; 1994 (ISO 9001; 1994)

Questa certificazione è valida per il seguente campo applicativo:
This certificate is valid for the following product or service ranges:

Progettazione e produzione di scambiatori di calore ed apparecchi similari a fascio tubiero fino DN 500; assemblaggio di aircooler e aerotermi. Progettazione di scambiatori di calore

Design and manufacture of heat exchangers and similar apparatus with tube nest up to 500 DN; assembling of aircoolers and unit heaters. Design of heat exchangers

Luogo e data *Place and date*	*Data Prima Emissione:* *First Issue Date:*	*per l'Organismo di Certificazione* *for the Accredited Unit*
Agrate Brianza, (MI) 1999-11-26	**1998-03-05**	**Det Norske Veritas Italia S.r.l.**

Lead Auditor: STUART IAN CLARK

Settore EA: 17

SINCERT

Registrazione N. 003A

Leonardo Omodeo Zorini
Management Representative

La validità del presente certificato è subordinata a sorveglianza periodica (ogni 6, 9 o 12 mesi) e al riesame completo del sistema con periodicità triennale
The validity of this certificate is subjected to periodical audits (every 6, 9 or 12 month) and complete re-assessment of the system every three years

Fin dalla sua fondazione, 1977, la Flovex ha operato con professionalità nel campo degli scambiatori di calore.

Nel Mondo stanno funzionando più di 100.000 impianti con scambiatori Flovex.

Una forte tendenza a seguire le richieste del mercato e dei clienti ha permesso a Flovex di espandersi durante gli anni sia in Italia che in vari Paesi europei distinguendosi per la sua alta qualità (ISO 9001).

Particolare cura è posta nello sviluppo della progettazione termodinamica. La Flovex è membro dell'Istituto Heat Transfer Research Inc. (USA) ed utilizza le più sofisticate tecniche di analisi per ottimizzare la scelta di ogni tipo di scambiatore.

La vasta gamma di prodotti (scambiatori a fascio tubiero, scambiatori ad aria, scambiatori a piastre, condensatori, riscaldatori, filtri per olio) consentono a Flovex di soddisfare le esigenze di ogni Cliente. Tutti gli scambiatori vengono prodotti sia in versione standard Flovex, sia secondo normative (PED, TEMA, API, ecc).

Since its foundation 20 years ago, Flovex has been operating with authority in the field of heat exchangers.

More than 100.000 Flovex heat exchangers are working in the world.

A strong orientation to the market and to customer requirements has allowed Flovex to expand over the years both on the national territory and in various European countries with a continuous track record of high quality (ISO 9001).

Particulary care is taken in developping the thermodynamic project. Flovex is a member of Heat Transfer Research Inc. (USA) and employs the most advanced instruments to make the best choise of any type of coolers.

The wide range of manufactured products (shell and tube heat exchangers, fan coolers, plate coolers, condensers, heaters, oil filters) puts Flovex in the position to meet the heat exchange needs of almost every Customer. All products are manufactured both in Flovex own versions and in standard (PED, TEMA, API, etc.) versions.

I dati indicati in questo catalogo non sono impegnativi, e la Flovex allo scopo di migliorare la propria produzione si riserva il diritto di apportare modifiche in qualsiasi momento e senza alcun preavviso.
È vietata ogni riproduzione anche parziale delle figure e testi senza nostra autorizzazione.

The information shown in this catalogue are not binding and in order to improve production, Flovex reserves the right to make any changement (including sizes) considered necessary at anytime and without previous notice.
Any reproduction (also partial) of figures and texts is forbidden without our authorization.

SCAMBIATORI DI CALORE *HEAT EXCHANGERS*

ST

Scambiatore standard. Grande efficienza e versalità. Completa gamma disponibile a stock. Impieghi di piccola e media potenzialità, con portate olio fino a 200 lt. Corpo in lega leggera. Fascio ad alettatura integrale.
Standard exchanger with great versatility and efficiency. All models ready on stock. Used for small and medium cooling capacity, oilflow up to 200 (lit/'). Shell in light alloy integrally finned tubes.

EM

Completa gamma di scambiatori in diverse composizioni di forma e materiali. Impieghi di media e alta potenzialità per oleodinamica, chimica, recupero energetico ecc. Corpo in acciaio al carbonio. Fascio ad alettatura integrale.
Medium and high cooling capacity extremely rugged construction, almost all combination of materials gives versatility to use this type of exchanger from hydraulics, chemicals, to energy saving. Standard with carbon steel shell, integrally finned tubes.

WE

Realizzazione a fascio tubiero estraibile anche per potenzialità molto elevate. Unità predisegnate con componenti a stock. Portate oltre 500 (lit/') e superfici di 1000 m^2 e oltre.
Pull-out bundle type exchanger of infinite combinations of materials, practically no limits in cooling capacity, most components on stock. Flowrates over 500 (lit/') cooling surface to 1000 m^2 and over.

FC

Scambiatori per montaggio in serbatoio ed esterno. Totale assorbimento dello STRESS TERMICO mediante il fascio a spirale flottante.
Integrally finned spiral bundles to withstand THERMAL SHOCK, possibility to use outside or inside the tank.

LT

Scambiatori con raffreddamento ad aria per fluidi e gas in pressione fino a 20 (Bar) di esercizio. Completa gamma disponibile da stock.
Realizzazioni speciali di grandi unità multiple del modulo standard.
Aircooled units for liquids and gasses up to 20 (Bar) of pressure. Complete range of standard coolers on stock. Special big units made to calculation due to modular system.

BP

Scambiatore a testa flottante per risolvere problemi di ALTA TEMPERATURA. Componenti standard da stock.
Small floating headed exchanger specially designed to handle HIGH TEMPERATURES. Standardised components from stock.

TW E *AND* CM

Scambiatori realizzati in accordo alle norme internazionali TEMA-ASME, e PED. Ampia scelta dei materiali e delle configurazioni. Collaudi certificati da LL.RR. - BV - NV ecc.
Whole range of exchangers built according to A.S.M. E. / T .E.M.A. e PED codes. Materials according to prescriptions, to fluids. Certificates, welders qualifications, according to LL.RR., BV, NV, etc.

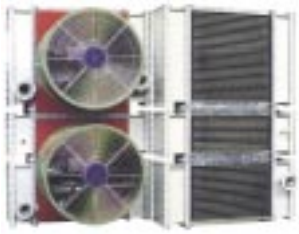

KS

Scambiatori con raffreddamento ad aria per ambienti pericolosi e in applicazioni gravose. Realizzazione secondo norme con tubi alettati in rame, alluminio, inox, titanio ecc.
Heavy duty aircooled exchangers to suite most codes, flameproof and hazardous aplications. Made with bare or finned tubes. Materials as carbon steel, copper alloys, stainless or light alloy to suite most prescriptions.

SHEET 2001.100

FLOVEX S.p.A. - 20056 Grezzago (MI) - Via Abruzzi 4/6 - TEL. 02-920192.1 - FAX 02-92019239

SCAMBIATORI
HEAT EXCHANGERS

ST 80

• Compatto • Efficiente • Economico
• Solid • Efficient • Cheap

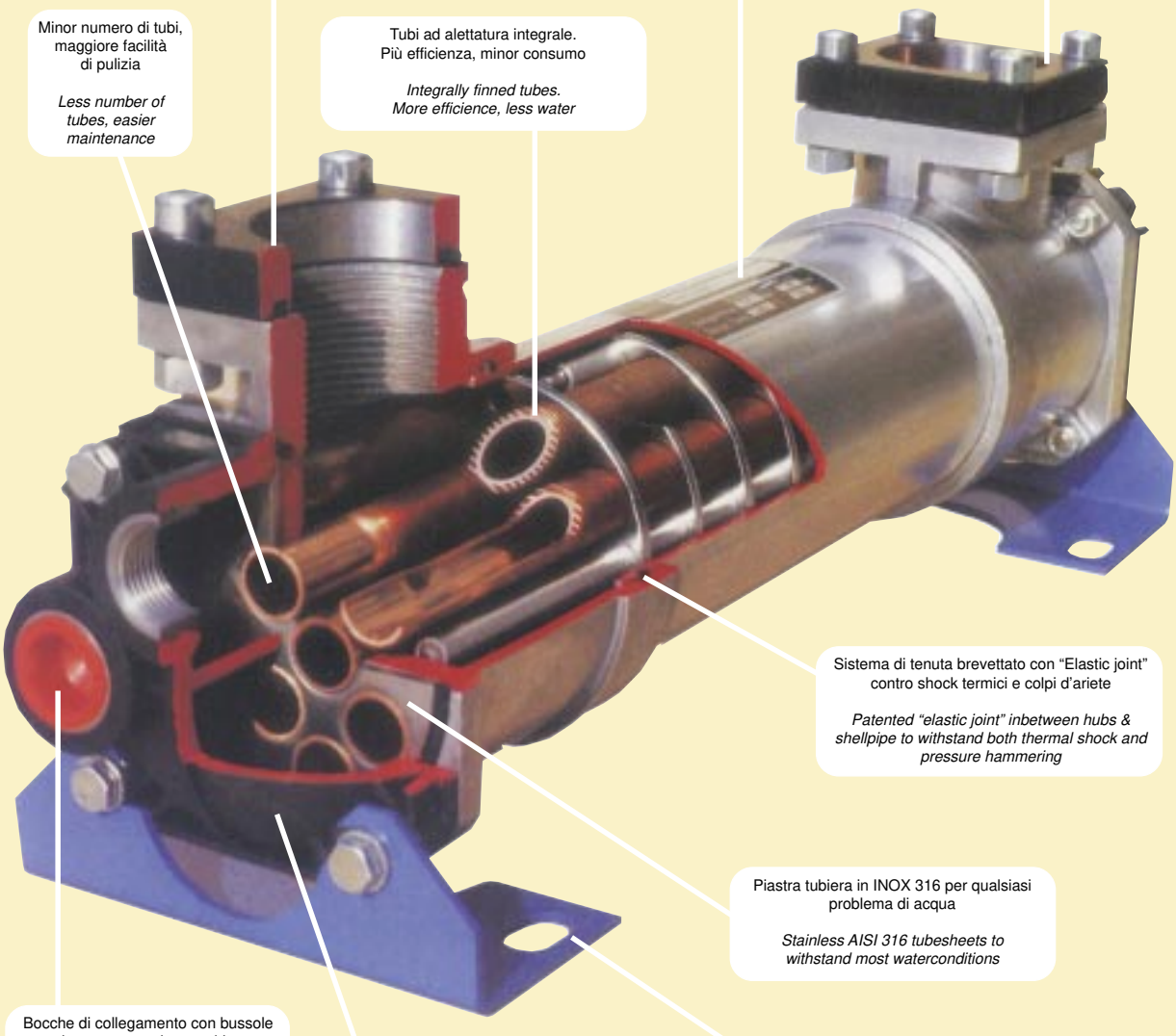

Controflange SAE
per un più facile montaggio

SAE counterflanges for easier pipe connection

Connessioni filettate o flangiate.
Ampie dimensioni per minori cadute di pressione

Threaded or flanged connections oversized to give less pressure drop at highest flow rates

Targa di identificazione,
ogni scambiatore è collaudato

Nameplate of identification, each exchanger is tested

Minor numero di tubi,
maggiore facilità
di pulizia

Less number of tubes, easier maintenance

Tubi ad alettatura integrale.
Più efficienza, minor consumo

Integrally finned tubes.
More efficience, less water

Sistema di tenuta brevettato con "Elastic joint"
contro shock termici e colpi d'ariete

Patented "elastic joint" inbetween hubs & shellpipe to withstand both thermal shock and pressure hammering

Piastra tubiera in INOX 316 per qualsiasi
problema di acqua

Stainless AISI 316 tubesheets to withstand most waterconditions

Bocche di collegamento con bussole
incorporate nel coperchio

Inserted metallic connections in front cover

Piedi di fissaggio
posizionati su 90°

Rotable supporting feet adaptable on site

Coperchi in materiale sintetico rinforzato,
resistenti alla corrosione

Corrosion resistant reinforced syntetic covers

SCAMBIATORI DI CALORE FLOVEX

Nella progettazione degli scambiatori di calore le possibili combinazioni di materiali e soluzioni tecniche sono praticamente inesauribili. Il buon funzionamento e la durata di uno scambiatore sono legati ad una scelta mirata al tipo di applicazione. Per gli scambiatori di tipo industriale la Flovex ha voluto ricercare il massimo rapporto tra efficienza e robustezza, sono quindi impiegati per tutti gli scambiatori, nella esecuzione base, TUBI AD ALETTATURA INTEGRALE.

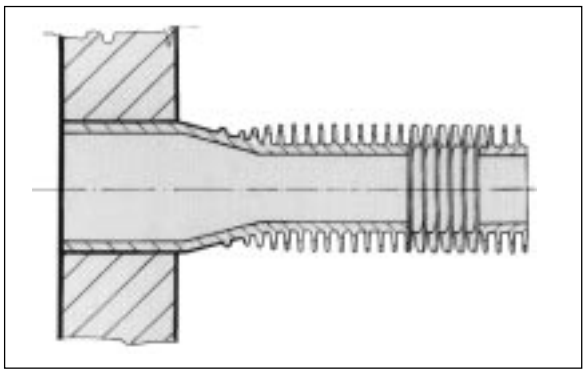

Essi sono ottenuti dal tubo liscio mediante deformazione plastica: questa lavorazione ne migliora anche le caratteristiche fisico-meccaniche e la resistenza alla corrosione elettrochimica.
L'impiego di TUBI ALETTATI oltre a rendere possibili dimensioni di ingombro più contenute, implica molteplici vantaggi. Grazie ai più favorevoli rapporti di velocità e coefficienti di scambio, permette un MINORE consumo di acqua, alta affidabilità e resistenza allo sporcamento.
Nel confronto con scambiatori di tubo tradizionale di piccolo diametro e con gli scambiatori a piastre, l'impiego del TUBO ALETTATO si è dimostrato soluzione vincente sia per costi, ingombri e con resistenza allo sporcamento (durata dello scambiatore) anche 3 volte maggiore.
La pluriennale esperienza Flovex nell'impiego di tubi alettati in rame e sue leghe consente di affiancare alla esecuzione base, quando particolari condizioni lo impongono, una ampia gamma di opzioni con tubi INOX-FERROMONEL nelle tradizionali esecuzioni sia liscie che ad alettatura integrale.

GARANZIA

La garanzia ha validità di 2 mesi dalla data di consegna. La Flovex si impegna a sostituire o riparare i prodotti che risultino difettosi, purché non siano stati manomessi e siano stati correttamente impiegati. Le prestazioni in garanzia vengono effettuate solo ed esclusivamente f.co Flovex. È esclusa da ogni forma di garanzia il deterioramento provocato da sporcamento, corrosione, erosione, corpi estranei, vibrazioni e altre cause similari.

HEAT EXCHANGERS BY FLOVEX

In projecting a good heat exchanger to suit the applications infinite combinations of materials and technical solutions can be used. Good performance and long lasting life are strictly related to this fact.
For industrial applications in Flovex a deep research has been made to get the best performance together with rugged longlasting construction. In fact as standard, the choice of the INTEGRALLY FINNED TUBES has been adopted. These tubes are rolled from bare tubes by plastic deformation; with this operation the surface increases about four times, during this procedure increases the resistance of the tube to corrosion also. The exchanger with such tubes will have smaller size, higher velocities of the water inside the tubes, this means using less water, and less fouling due to calcium and other deposits: it means longher life.
Using INTEGRALLY FINNED TUBES (with outside diameter of at least 16 (mm) and over), against other exchangers using small bare tubes, or plate exchangers, is many times a winning choice as price, sometimes as size, and all times as resistance against fouling

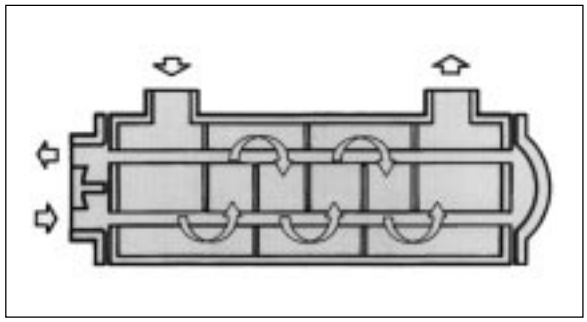

(the average time inbetween necessary cleaning can be three times longer..!).
After many years of experience by Flovex using integrally finned tubes in copper and copper alloys, as optional to particular need or to customers requirement we can deliver with STAINLESS, CARBON STEEL, MONEL and lot's of other materials, finned or bare tubes; projecting also many different types of exchangers not shown in our standard catalogue.

GUARANTEE

Flovex guarantee shall extend for a period of twelve (12) months after the shipping date. Flovex shall repair or replace f.o.b. own plant any parts proven to be defective within the guarantee period. Finished materials and accessories purchased from other manufacturers, including tubes, are warranted only to the extent of the original manufacturer's warranty. Flovex does not assume any responsibility for deterioration of any part or parts of the equipment due to corrosion, erosion, flow induced tube vibration, or any other causes.

FLOVEX S.p.A. - 20056 Grezzago (MI) - Via Abruzzi 4/6 - TEL. 02-920192.1 - FAX 02-92019239

SCAMBIATORI
HEAT EXCHANGERS

SHEET 2001.103

LT O

SCAMBIATORI AD ARIA MEDIA POTENZIALITÀ

Aircoolers
Medium duty

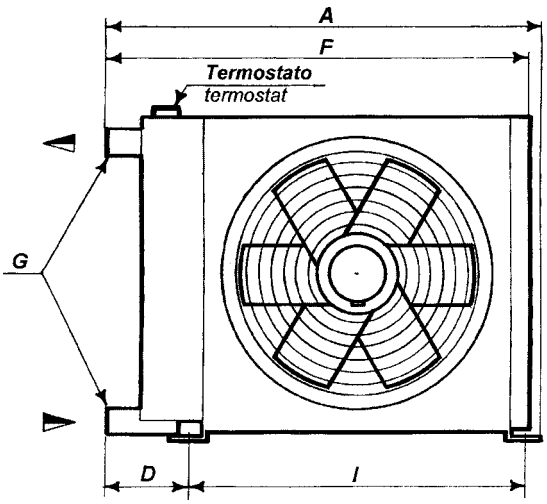

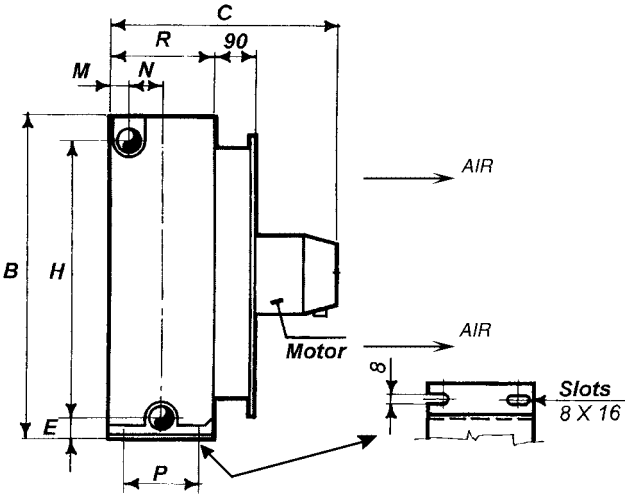

ESEMPIO CODICE PRODOTTO *example of product code*	
VECCHIO - *old*	NUOVO - *new*
LT - 5.4 - A - 220	**LTO . 0504 . A20000**

TEMP. PROGETTO	*design temperat.*	**°C**	99
PRESS. PROGETTO	*design pressure*	**Bar G**	10
PRESSIONE PROVA	*test pressure*	**Bar G**	13
DATI DI PROGETTO	*design data*	**U.M.**	TUBES

VERNICIATO - *Painting* = **RAL 7381**

VECCHIA SIGLA *Old size*	**TAGLIA** size	**A**	**B**	**C**	**D**	**E**	**F**	**H**	**I**	**M**	**N**	**P**	**R**	**Ø G**	MOTORE ELETTRICO electric motor
LT 5.4	**0504**	710	510	300	130	30	700	455	550	30	50	120	170	1¼"	80W - 400V~ 3 Phase
LT 7.4	**0704**	965	735	420	155	30	955	680	780	30	50	140	190	1½"	250W - 400V~ 3 Phase
LT 7.8	**0708**	965	735	510	155	30	955	680	780	30	140	230	280	1½"	730W - 400V~ 3 Phase

TERMOSTATI DISPONIBILI: (CONTATTI N.A.)
TA: standard, protezione IP 44 taratura fissa 48°C +/– 12°C
TB: opzionale, protezione IP 65 taratura fissa 48°C +/– 8°C

THERMOSTAT OPTIONAL: *(CONTACT N.O.)*
TA: standard type, protection IP 44 fixed range 48°C +/– 12°C
TB: opzional type, protection IP 65 fixed range 48°C +/– 8°C

DIAGRAMMI DI RENDIMENTO
Diagrammi validi per olio idraulico 4°E a 40°C alla temperatura di 50°C.

HEAT TRANSFER CURVES
The curves are valides for hydraulic oil 4°E at 40°C at medium temperature of 50°C.

① = Δt 15°C
② = Δt 25°C
③ = Δt 35°C
(Δt = T OIL - t AIR)

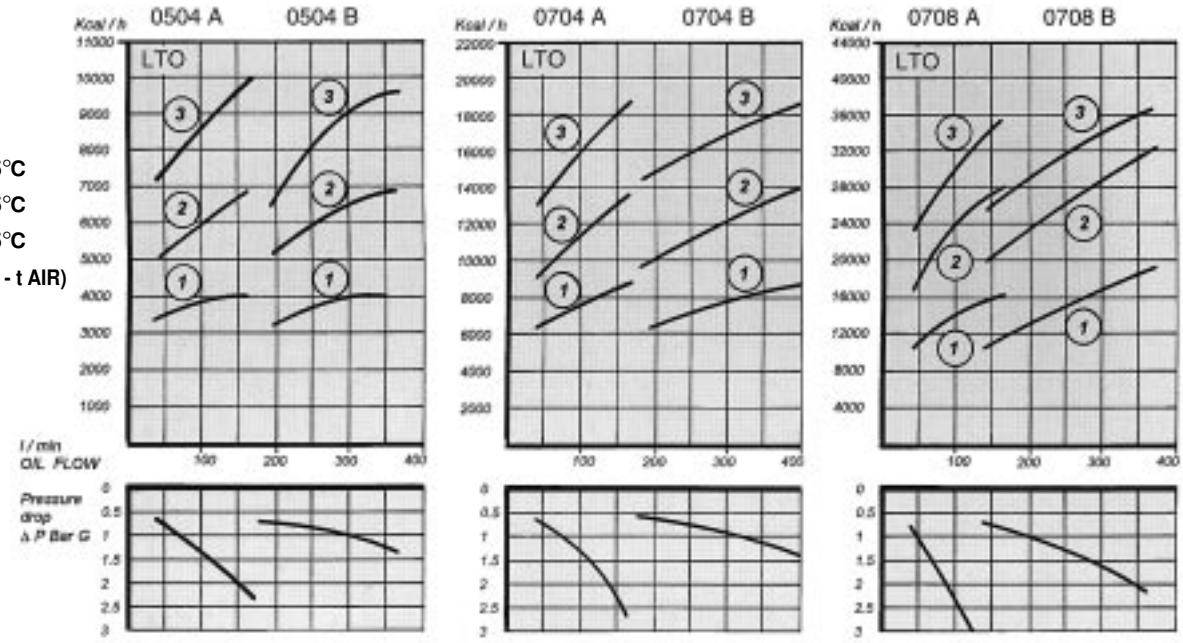

Dimensioni e caratteristiche non impegnative. Tolleranze secondo norme. - *Dimensions and characteristics of the catalogue are subject to change without notice. Clearances according to international standards.*

FLOVEX S.p.A. - 20056 Grezzago (MI) - Via Abruzzi 4/6 - TEL. 02-920192.1 - FAX 02-92019239

LT D

SCAMBIATORI AD ARIA DOPPIO MOTORE

Aircoolers
Double motors

SCAMBIATORI
HEAT EXCHANGERS

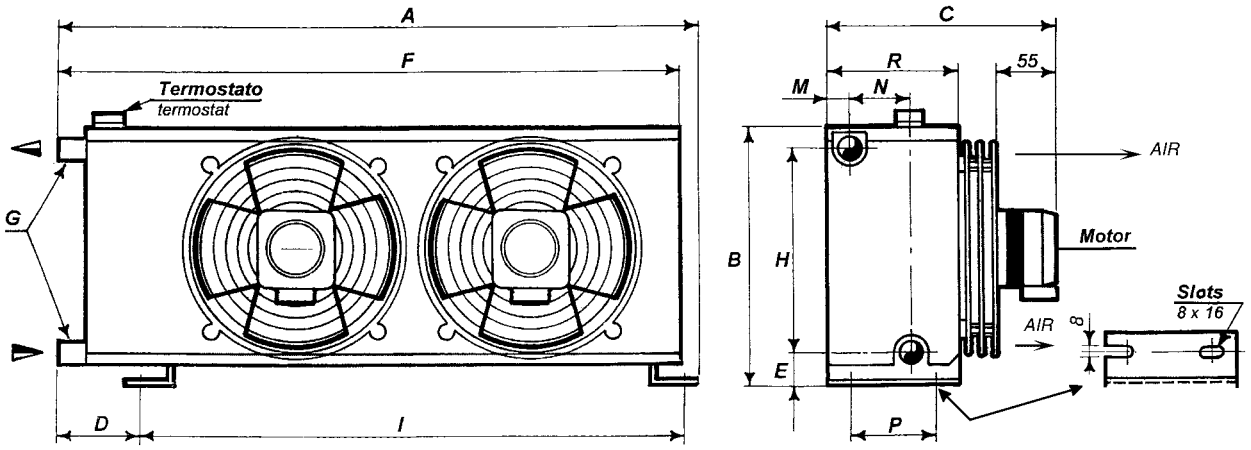

ESEMPIO CODICE PRODOTTO *example of product code*	
VECCHIO - *old*	NUOVO - *new*
LTD - 1.3 - A - 12V	**LTD . 0103 . AD0000**

TEMP. PROGETTO	*design temperat.*	°C	99
PRESS. PROGETTO	*design pressure*	**Bar G**	10
PRESSIONE PROVA	*test pressure*	**Bar G**	13
DATI DI PROGETTO	*design data*	**U.M.**	TUBES

VERNICIATO - *Painting* = **RAL 7381**

VECCHIA SIGLA *Old size*	**TAGLIA** size	**A**	**B**	**C**	**D**	**E**	**F**	**H**	**I**	**M**	**N**	**P**	**R**	**Ø G**	MOTORE ELETTRICO electric motor
LT 1.3	**0103**	535	230	205	75	40	520	175	450	15	50	75	108	1/2"	2 x 48W - 230V~ 1 Phase
LT 2.3	**0203**	665	285	205	100	45	650	220	550	15	40	75	108	3/4"	2 x 65W - 230V~ 1 Phase
LT 3.4	**0304**	880	385	270	115	50	865	315	750	35	55	120	150	1"	2 x 50W - 400V~ 3 Phase

Nota: tutti i modelli sono disponibili anche con motore elettrico in corrente continua 12 V o 24 V

Note: all the models are availables with electrical motors 12 V (dc) or 24 V (dc)

TERMOSTATI DISPONIBILI: (CONTATTI N.A.)
TA: standard, protezione IP 44 taratura fissa 48°C +/– 12°C
TB: opzionale, protezione IP 65 taratura fissa 48°C +/– 8°C

***THERMOSTAT OPTIONAL**: (CONTACT N.O.)*
TA: standard type, protection IP 44 fixed range 48°C +/– 12°C
TB: opzional type, protection IP 65 fixed range 48°C +/– 8°C

DIAGRAMMI DI RENDIMENTO
Diagrammi validi per olio idraulico 4°E a 40°C alla temperatura di 50°C.

HEAT TRANSFER CURVES
The curves are valides for hydraulic oil 4°E at 40°C at medium temperature of 50°C.

① = Δt 15°C
② = Δt 25°C
③ = Δt 35°C
(Δt = T OIL - t AIR)

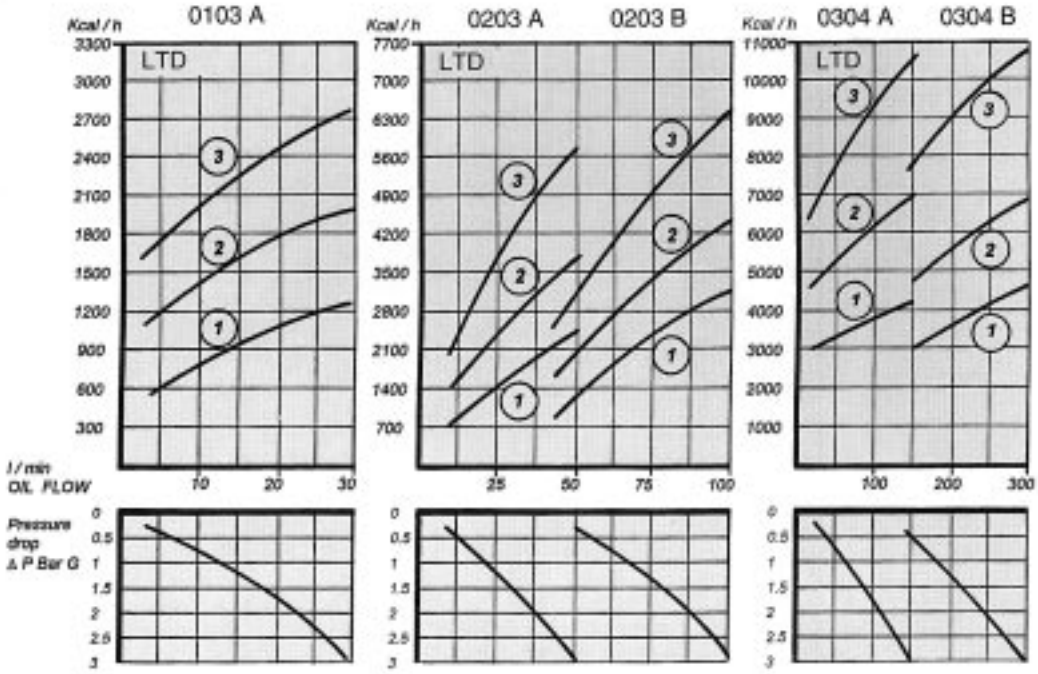

Dimensioni e caratteristiche non impegnative. Tolleranze secondo norme. - *Dimensions and characteristics of the catalogue are subject to change without notice. Clearances according to international standards.*

SHEET 2001.130

LT D

SCAMBIATORI AD ARIA DOPPIO MOTORE

Aircoolers
Double motors

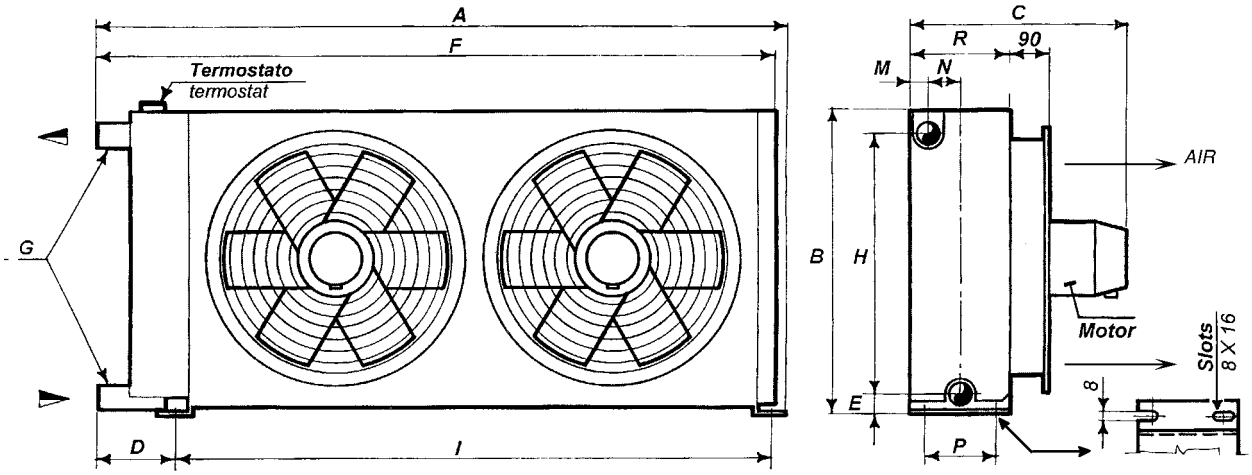

ESEMPIO CODICE PRODOTTO *example of product code*	
VECCHIO - *old*	NUOVO - *new*
LTD - 5.4 - A - 220	**LTD . 0504 . A20000**

TEMP. PROGETTO	*design temperat.*	**°C**	99
PRESS. PROGETTO	*design pressure*	**Bar G**	10
PRESSIONE PROVA	*test pressure*	**Bar G**	13
DATI DI PROGETTO	*design data*	**U.M.**	TUBES

VERNICIATO - *Painting* = **RAL 7381**

VECCHIA SIGLA *Old size*	**TAGLIA** size	**A**	**B**	**C**	**D**	**E**	**F**	**H**	**I**	**M**	**N**	**P**	**R**	**Ø G**	MOTORE ELETTRICO electric motor
LT 5.4	**0504**	1210	510	300	130	30	1200	455	1050	30	50	120	170	1¼"	2 x 80W - 400V~ 3 Phase
LT 7.4	**0704**	1695	735	420	155	30	1685	680	1510	30	50	140	190	1½"	2 x 250W - 400V~ 3 Phase
LT 7.8	**0708**	1695	735	510	155	30	1685	680	1510	30	140	230	280	1½"	2 x 730W - 400V~ 3 Phase

TERMOSTATI DISPONIBILI: (CONTATTI N.A.)
TA: standard, protezione IP 44 taratura fissa 48°C +/– 12°C
TB: opzionale, protezione IP 65 taratura fissa 48°C +/– 8°C

THERMOSTAT OPTIONAL: *(CONTACT N.O.)*
TA: standard type, protection IP 44 fixed range 48°C +/– 12°C
TB: opzional type, protection IP 65 fixed range 48°C +/– 8°C

DIAGRAMMI DI RENDIMENTO
Diagrammi validi per olio idraulico 4°E a 40°C alla temperatura di 50°C.

HEAT TRANSFER CURVES
The curves are valides for hydraulic oil 4°E at 40°C at medium temperature of 50°C.

① = Δt 15°C
② = Δt 25°C
③ = Δt 35°C
(Δt = T OIL - t AIR)

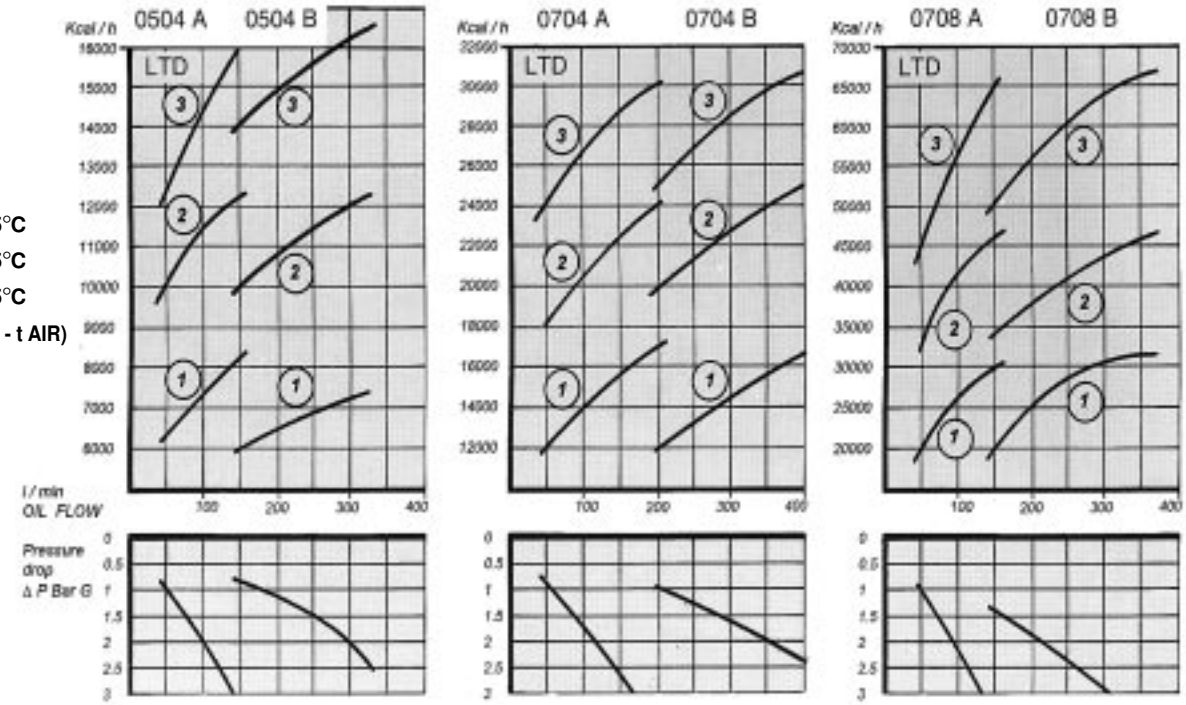

Dimensioni e caratteristiche non impegnative. Tolleranze secondo norme. - *Dimensions and characteristics of the catalogue are subject to change without notice. Clearances according to international standards.*

FLOVEX S.p.A. - 20056 Grezzago (MI) - Via Abruzzi 4/6 - TEL. 02-920192.1 - FAX 02-92019239

LTF

SCAMBIATORI AD ARIA ALTA POTENZIALITÀ

Aircoolers
High duty

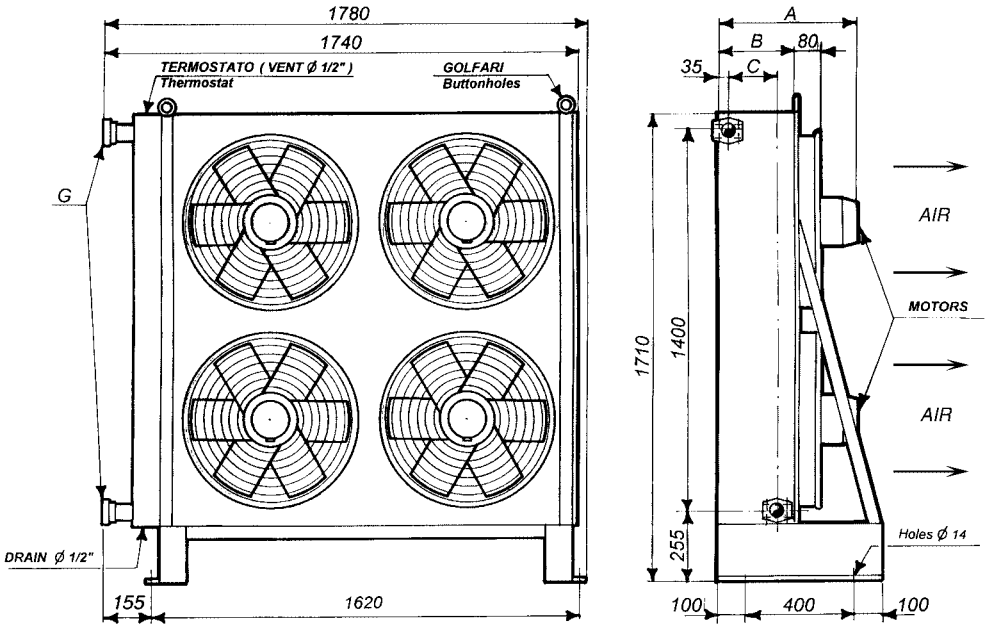

VERNICIATO -
Painting = **RAL 7381**

VECCHIA SIGLA *Old size*	**TAGLIA** size	**A**	**B**	**C**	**Ø G**	MOTORE ELETTRICO *electric motor*
14.4	**1404**	400	190	65	2" SAE 3000 #	2 x 250W - 400V~ 3 Phase
14.8	**1408**	490	280	185	2" SAE 3000 #	2 x 730W - 400V~ 3 Phase

TEMP. PROGETTO	*design temperat.*	**°C**	99
PRESS. PROGETTO	*design pressure*	**Bar G**	10
PRESSIONE PROVA	*test pressure*	**Bar G**	13
DATI DI PROGETTO	*design data*	**U.M.**	TUBES

FLANGE OPZIONALI: ANSI - UNI - GAS/F - GAS/M - NPT/F

FLANGE OPTIONAL: *ANSI - UNI - GAS/F - GAS/M - NTP/F*

TERMOSTATI DISPONIBILI: (CONTATTI N.A.)
TA: standard, protezione IP 44 taratura fissa 48°C +/– 12°C
TB: opzionale, protezione IP 65 taratura fissa 48°C +/– 8°C

THERMOSTAT OPTIONAL: *(CONTACT N.O.)*
TA: standard type, protection IP 44 fixed range 48°C +/– 12°C
TB: opzional type, protection IP 65 fixed range 48°C +/– 8°C

DIAGRAMMI DI RENDIMENTO
Diagrammi validi per olio idraulico 4°E a 40°C alla temperatura di 50°C.

HEAT TRANSFER CURVES
The curves are valides for hydraulic oil 4°E at 40°C at medium temperature of 50°C.

① = Δt 15°C
② = Δt 25°C
③ = Δt 35°C
(Δt = T OIL - t AIR)

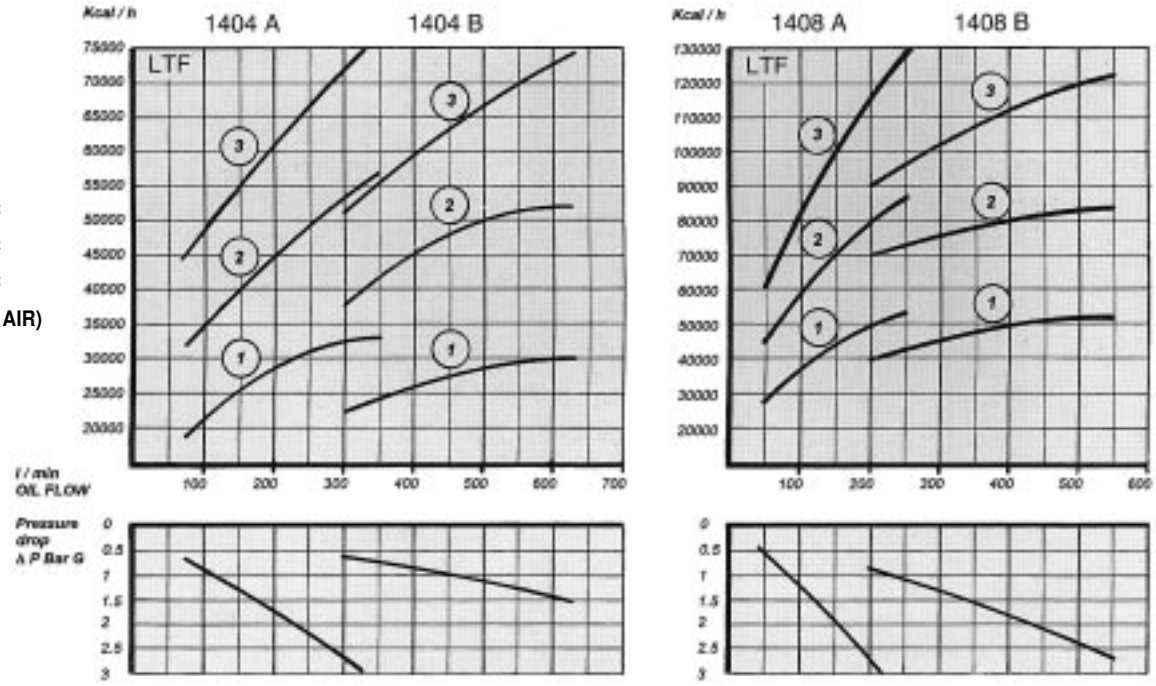

Dimensioni e caratteristiche non impegnative. Tolleranze secondo norme. - *Dimensions and characteristics of the catalogue are subject to change without notice. Clearances according to international standards.*

FLOVEX S.p.A. - 20056 Grezzago (MI) - Via Abruzzi 4/6 - TEL. 02-920192.1 - FAX 02-92019239

LT M

SCAMBIATORI AD ARIA ALTA POTENZIALITÀ

Aircoolers
High duty

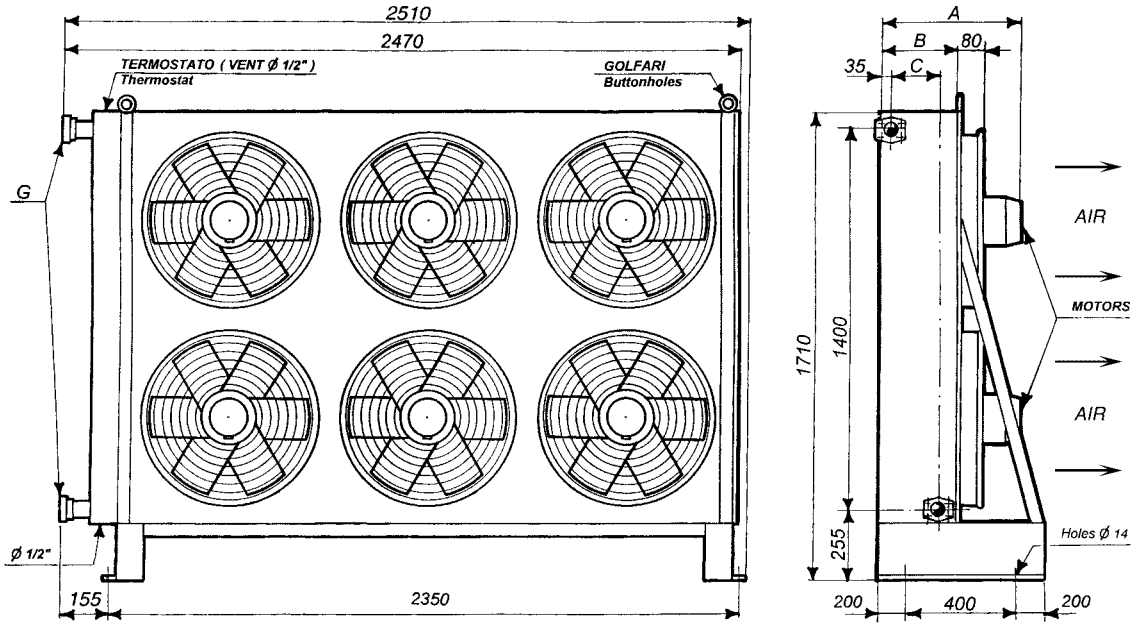

VERNICIATO - *Painting* = **RAL 7381**

VECCHIA SIGLA *Old size*	**TAGLIA** size	**A**	**B**	**C**	Ø **G**	MOTORE ELETTRICO *electric motor*
14/21.4	**2104**	400	190	65	2" SAE 3000 #	6 x 250W - 400V~ 3 Phase
14/21.8	**2108**	490	280	185	2" SAE 3000 #	6 x 730W - 400V~ 3 Phase

TEMP. PROGETTO	*design temperat.*	**°C**	99
PRESS. PROGETTO	*design pressure*	**Bar G**	10
PRESSIONE PROVA	*test pressure*	**Bar G**	13
DATI DI PROGETTO	*design data*	**U.M.**	TUBES

FLANGE OPZIONALI: ANSI - UNI - GAS/F - GAS/M - NPT/F

***FLANGE OPTIONAL**: ANSI - UNI - GAS/F - GAS/M - NTP/F*

TERMOSTATI DISPONIBILI: (CONTATTI N.A.)
TA: standard, protezione IP 44 taratura fissa 48°C +/– 12°C
TB: opzionale, protezione IP 65 taratura fissa 48°C +/– 8°C

***THERMOSTAT OPTIONAL**: (CONTACT N.O.)*
TA: standard type, protection IP 44 fixed range 48°C +/– 12°C
TB: opzional type, protection IP 65 fixed range 48°C +/– 8°C

DIAGRAMMI DI RENDIMENTO
Diagrammi validi per olio idraulico 4°E a 40°C alla temperatura di 50°C.

HEAT TRANSFER CURVES
The curves are valides for hydraulic oil 4°E at 40°C at medium temperature of 50°C.

① = Δt 15°C
② = Δt 25°C
③ = Δt 35°C
(Δt = T OIL - t AIR)

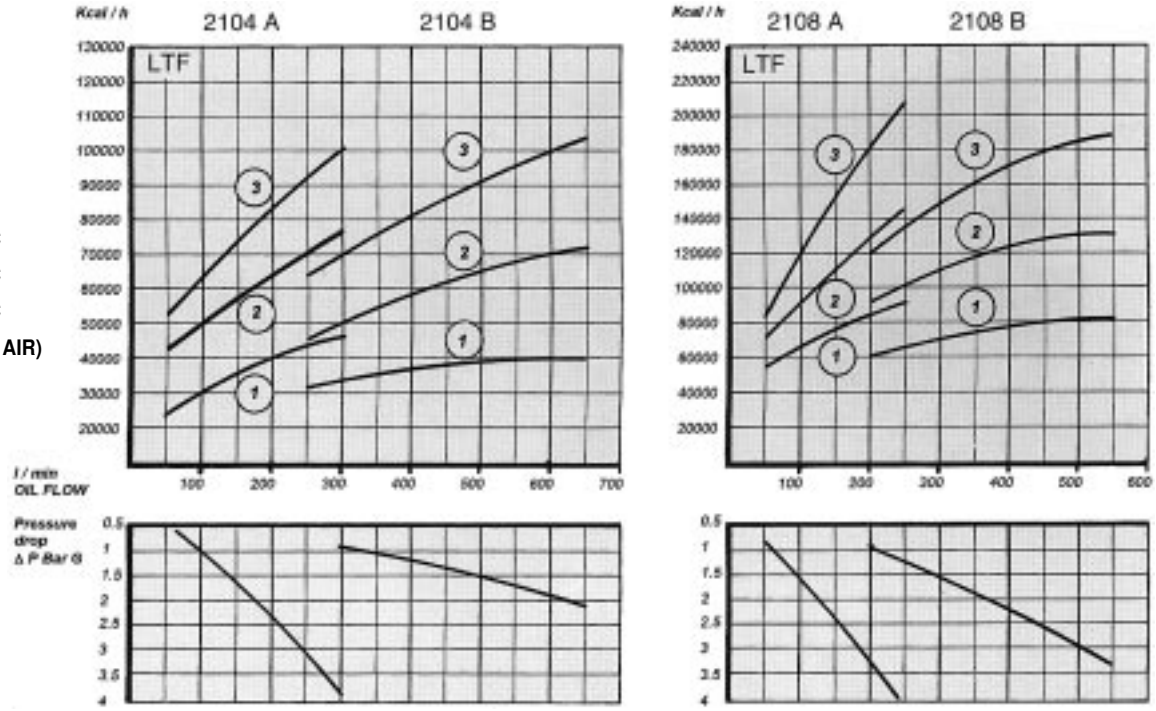

Dimensioni e caratteristiche non impegnative. Tolleranze secondo norme. - *Dimensions and characteristics of the catalogue are subject to change without notice. Clearances according to international standards.*

SHEET 2001.

FLOVEX S.p.A. - 20056 Grezzago (MI) - Via Abruzzi 4/6 - TEL. 02-920192.1 - FAX 02-92019239

EM 1 E *AND* ST 1

PRESTAZIONI DEGLI SCAMBIATORI

tipo STANDARD tubi alettati

PERFORMANCE HEAT EXCHANGER

STANDARD type finned tubes

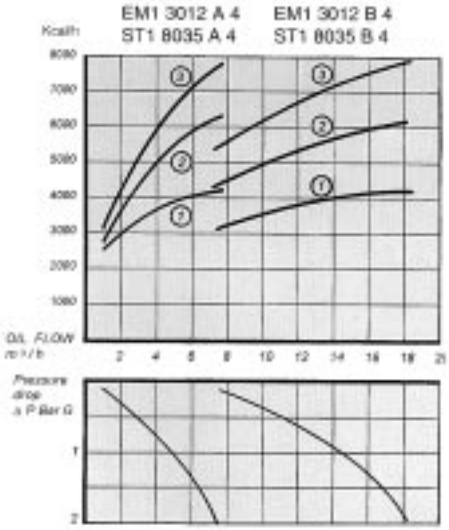

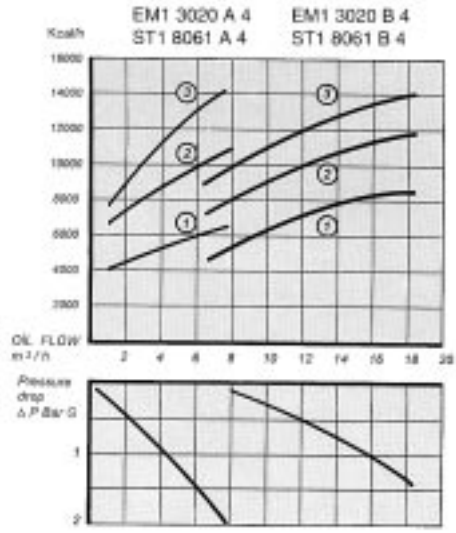

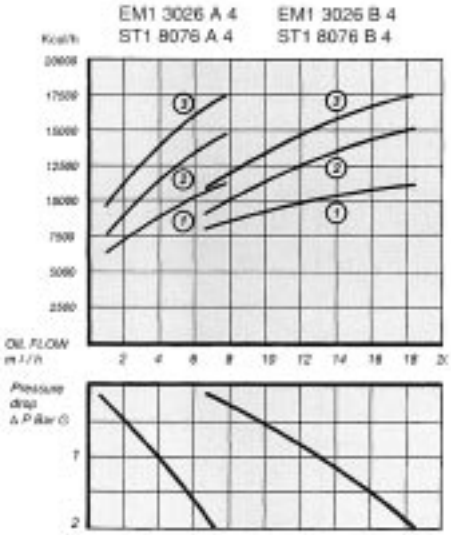

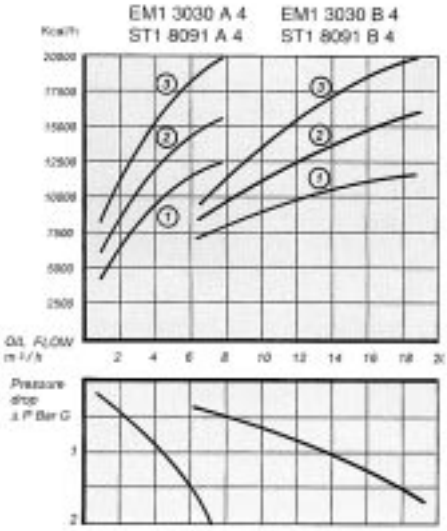

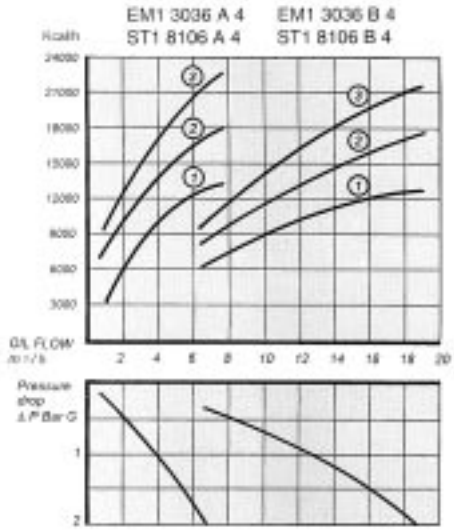

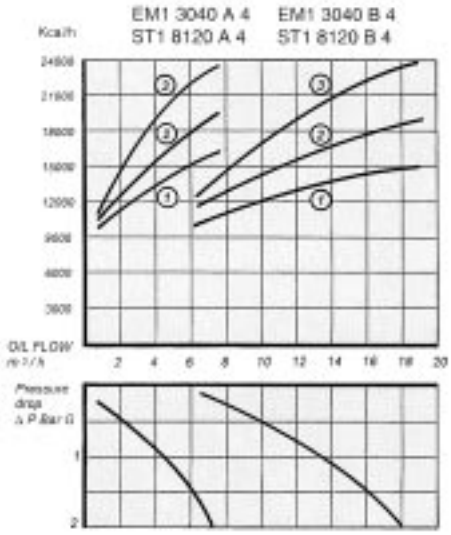

DIAGRAMMI DI RENDIMENTO
Diagrammi validi per olio idraulico ISO VG 46
Differenza di temperatura olio/acqua 25°C

CONSUMO D'ACQUA
① = 0.5 m³/h ② = 1.25 m³/h
③ = 2 m³/h

FATTORE DI CORREZIONE
Per differenze di temperatura olio/acqua diverse da 25°C prima di leggere le curve occorre moltiplicare le kcal/h che si vogliono dissipare per il coefficiente in tabella.

TABELLA *table*	
Δt *oil/water*	*Coefficient*
15	1.4
20	1.2
25	1
30	0.8
35	0.6

HEAT TRANSFER CURVES
The curves are valides for hydraulic oil ISO VG 46
Temperature difference oil/water 25°C

WATER CONSUMPTION
① = 0.5 m³/h ② = 1.25 m³/h
③ = 2 m³/h

TEMPERATURE CORRECTION
For difference of temperature inbetween oil/water other then 25°C before see the curves multiply kcal/h with coefficient of correction table.

Dimensioni e caratteristiche non impegnative. Tolleranze secondo norme. - *Dimensions and characteristics of the catalogue are subject to change without notice. Clearances according to international standards.*

FLOVEX S.p.A. - 20056 Grezzago (MI) - Via Abruzzi 4/6 - TEL. 02-920192.1 - FAX 02-92019239

EM 1

PRESTAZIONI DEGLI SCAMBIATORI

tipo STANDARD tubi alettati

DIAGRAMMI DI RENDIMENTO
Diagrammi validi per olio idraulico ISO VG 46
Differenza di temperatura olio/acqua 25°C

CONSUMO D'ACQUA
① = 2 m³/h ② = 3 m³/h ③ = 4 m³/h

FATTORE DI CORREZIONE
Per differenze di temperatura olio/acqua diverse da 25°C prima di leggere le curve occorre moltiplicare le kcal/h che si vogliono dissipare per il coefficiente in tabella.

PERFORMANCE HEAT EXCHANGER

STANDARD type finned tubes

HEAT TRANSFER CURVES
The curves are valides for hydraulic oil ISO VG 46
Temperature difference oil/water 25°C

WATER CONSUMPTION
① = 2 m³/h ② = 3 m³/h ③ = 4 m³/h

TEMPERATURE CORRECTION
For difference of temperature inbetween oil/water other then 25°C before see the curves multiply kcal/h with coefficient of correction table.

TABELLA *table*

Δt *oil/water*	*Coefficient*
15	1.4
20	1.2
25	1
30	0.8
35	0.6

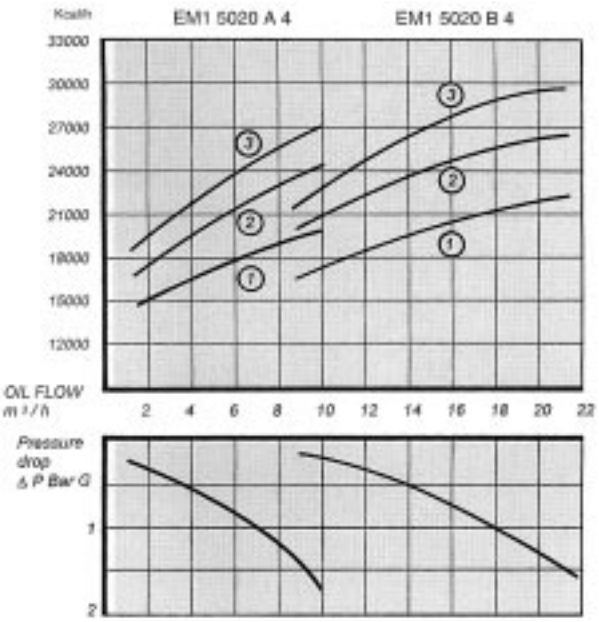

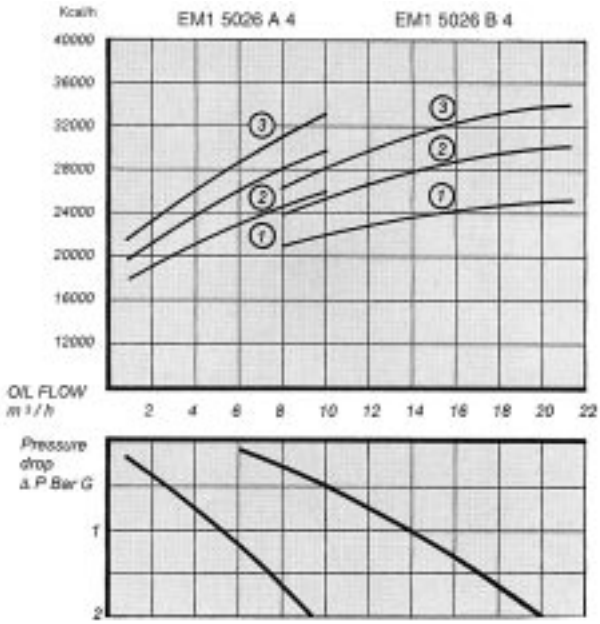

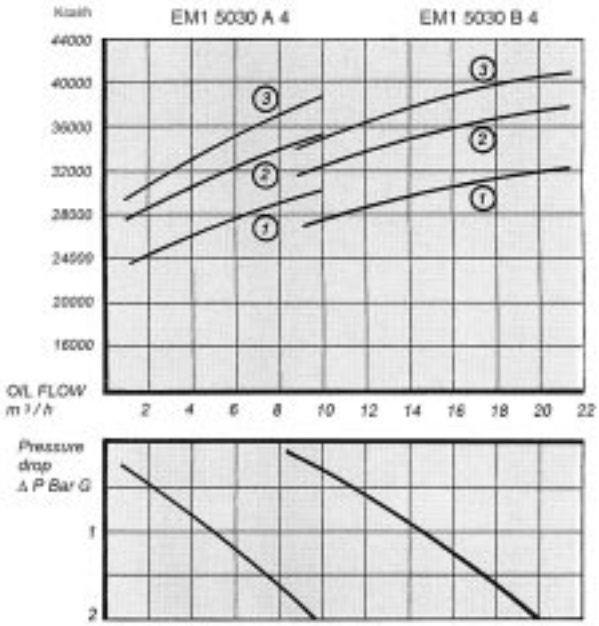

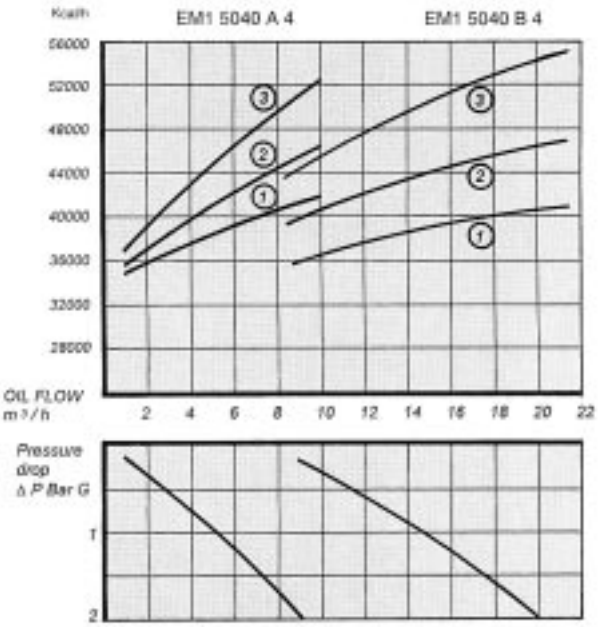

Dimensioni e caratteristiche non impegnative. Tolleranze secondo norme. - *Dimensions and characteristics of the catalogue are subject to change without notice. Clearances according to international standards.*

FLOVEX S.p.A. - 20056 Grezzago (MI) - Via Abruzzi 4/6 - TEL. 02-920192.1 - FAX 02-92019239

EM 1

PRESTAZIONI DEGLI SCAMBIATORI

tipo STANDARD tubi alettati

DIAGRAMMI DI RENDIMENTO
Diagrammi validi per olio idraulico ISO VG 46
Differenza di temperatura olio/acqua 25°C

CONSUMO D'ACQUA
① = 2.5 m³/h ② = 4 m³/h ③ = 5.5 m³/h

FATTORE DI CORREZIONE
Per differenze di temperatura olio/acqua diverse da 25°C prima di leggere le curve occorre moltiplicare le kcal/h che si vogliono dissipare per il coefficiente in tabella.

PERFORMANCE HEAT EXCHANGER

STANDARD type finned tubes

HEAT TRANSFER CURVES
The curves are valides for hydraulic oil ISO VG 46
Temperature difference oil/water 25°C

WATER CONSUMPTION
① = 2.5 m³/h ② = 4 m³/h ③ = 5.5 m³/h

TEMPERATURE CORRECTION
For difference of temperature inbetween oil/water other then 25°C before see the curves multiply kcal/h with coefficient of correction table.

TABELLA *table*

Δt *oil/water*	*Coefficient*
15	1.4
20	1.2
25	1
30	0.8
35	0.6

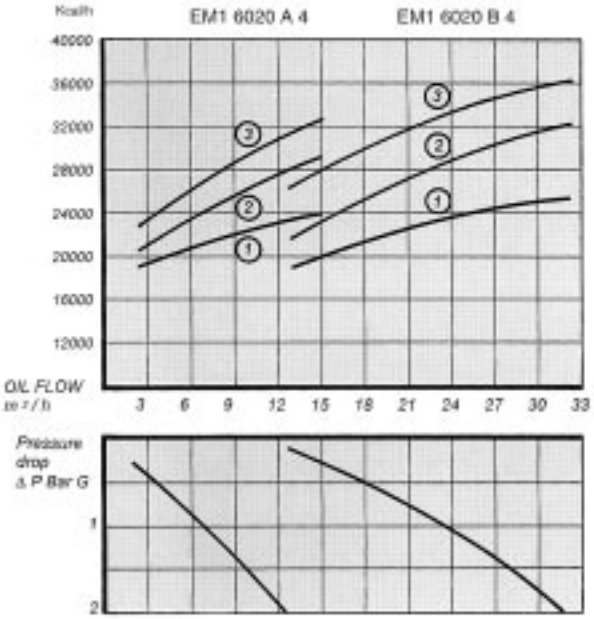

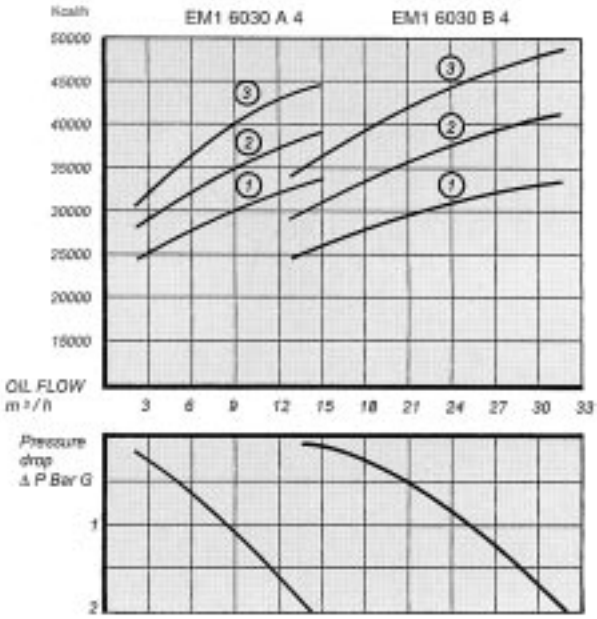

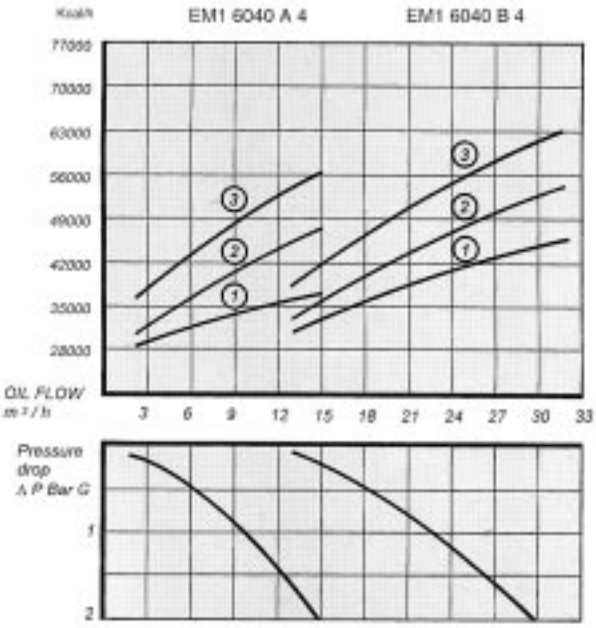

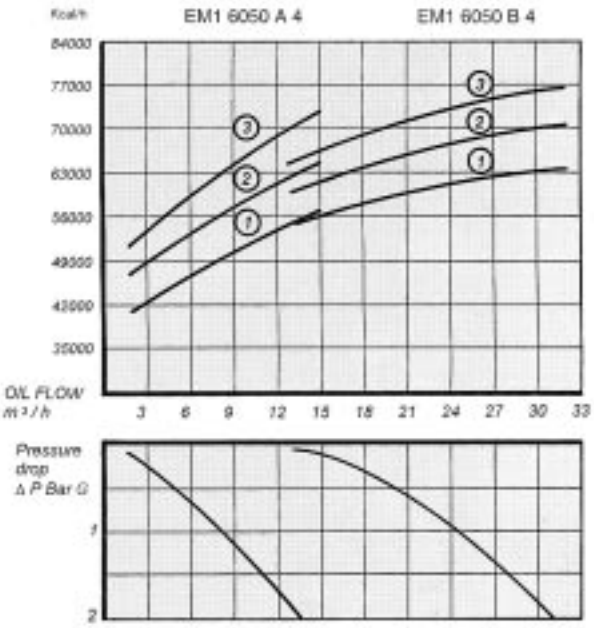

Dimensioni e caratteristiche non impegnative. Tolleranze secondo norme. - *Dimensions and characteristics of the catalogue are subject to change without notice. Clearances according to international standards.*

FLOVEX S.p.A. - 20056 Grezzago (MI) - Via Abruzzi 4/6 - TEL. 02-920192.1 - FAX 02-92019239

EM 1

PRESTAZIONI DEGLI SCAMBIATORI

tipo STANDARD tubi alettati

DIAGRAMMI DI RENDIMENTO

Diagrammi validi per olio idraulico ISO VG 46
Differenza di temperatura olio/acqua 25°C

CONSUMO D'ACQUA

① = 5 m³/h ② = 6 m³/h ③ = 7 m³/h
④ = 8 m³/h ⑤ = 9 m³/h ⑥ = 10 m³/h
⑦ = 11 m³/h ⑧ = 12 m³/h

FATTORE DI CORREZIONE

Per differenze di temperatura olio/acqua diverse da 25°C prima di leggere le curve occorre moltiplicare le kcal/h che si vogliono dissipare per il coefficiente in tabella.

PERFORMANCE HEAT EXCHANGER

STANDARD type finned tubes

HEAT TRANSFER CURVES

The curves are valides for hydraulic oil ISO VG 46
Temperature difference oil/water 25°C

WATER CONSUMPTION

① = 5 m³/h ② = 6 m³/h ③ = 7 m³/h
④ = 8 m³/h ⑤ = 9 m³/h ⑥ = 10 m³/h
⑦ = 11 m³/h ⑧ = 12 m³/h

TEMPERATURE CORRECTION

For difference of temperature inbetween oil/water other then 25°C before see the curves multiply kcal/h with coefficient of correction table.

TABELLA *table*

Δt *oil/water*	*Coefficient*
15	1.4
20	1.2
25	1
30	0.8
35	0.6

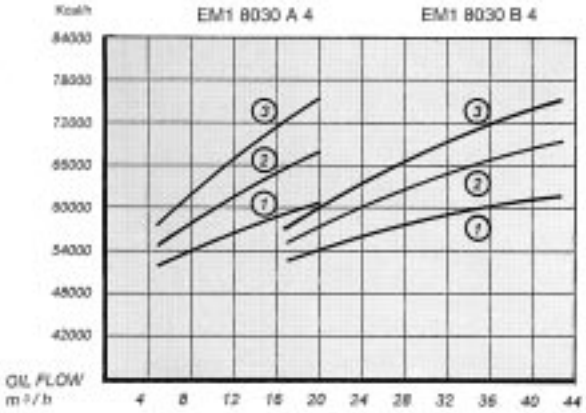

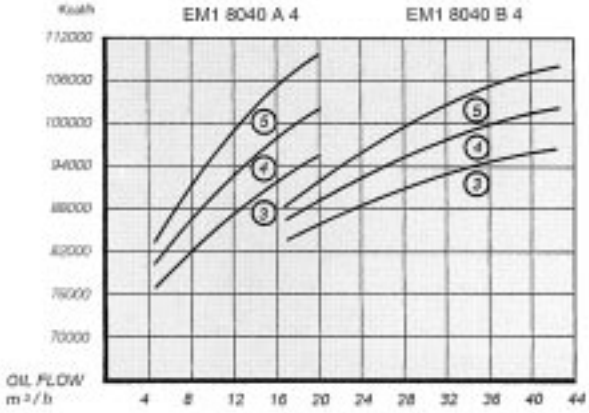

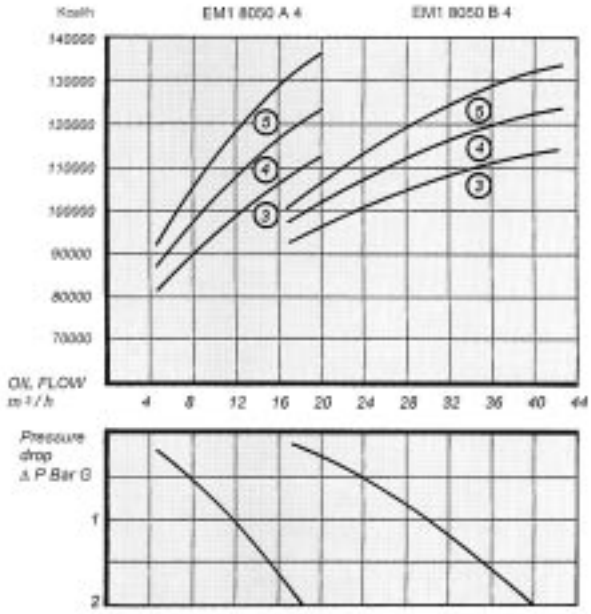

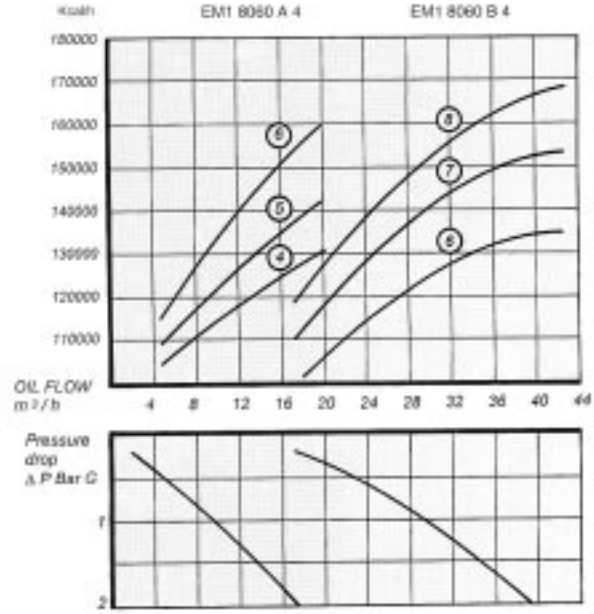

Dimensioni e caratteristiche non impegnative. Tolleranze secondo norme. - *Dimensions and characteristics of the catalogue are subject to change without notice. Clearances according to international standards.*

FLOVEX S.p.A. - 20056 Grezzago (MI) - Via Abruzzi 4/6 - TEL. 02-920192.1 - FAX 02-92019239

GENERAL INFORMATION OPERATING AND MAINTENANCE OF HEAT EXCHANGERS

SUCCESSFUL PERFORMANCE *of heat transfer equipment, length of service and freedom from operating difficulties are largely dependent upon:*

1. *Proper thermal design.*
2. *Proper physical design.*
3. *Manner of installation, including design of foundation and piping.*
4. *The method of operation.*
5. *The thoroughness and trequency of cleaning.*
6. *The materials, workmanship, and tools used in maintenance and making repairs and replacements.*

FAILURE TO PERFORM *properly may be due to one or more of the following:*

1. *Exchanger being dirty.*
2. *Operating conditions being different than design conditions.*
3. *Air or gas binding.*
4. *Incorrect piping connections.*
5. *Excessive clearance between baffles and shell due to corrosion.*
6. *Improper application.*

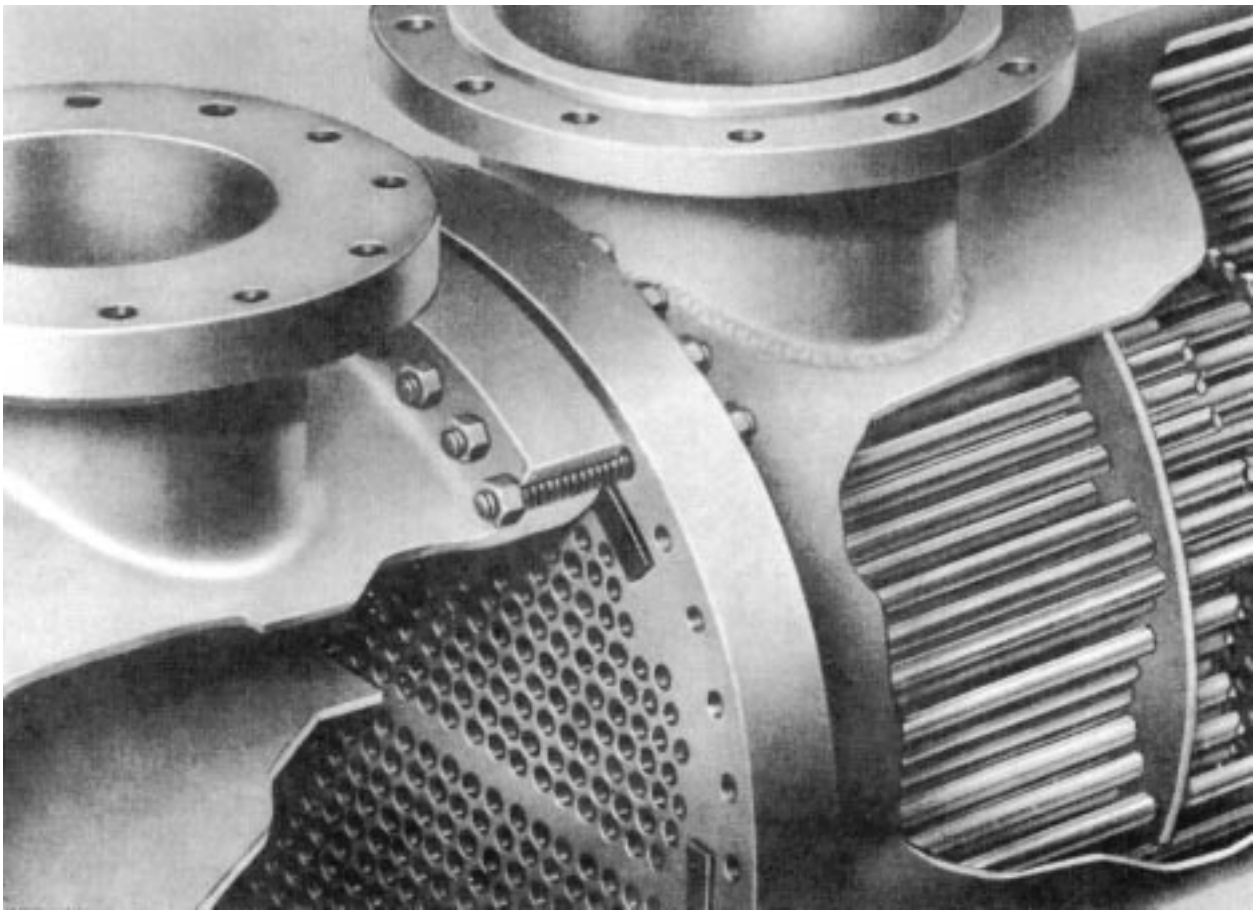

SHEET 2001.138

INSTALLATION PLANNING

1. On removable bundle heat exchangers provide sufficient clearance at the stationary end to permit the removal of the tube bundle from the shell. On the floating head end, provide space to permit removal of the shell cover and floating head cover.

2. On fixed bundle heat exchanger, provide sufficient clearance at one end to permit removal and replacement of tubes and at the other end sufficient clearance to permit tube rolling.

3. Provide valves and bypasses in the piping system so that both the shell side and tube side may be bypassed to permit isolation of the heat exchanger for inspection, cleaning and repairs.

4. Provide convenient means for frequent cleaning as suggested under maintenance.

5. Provide thermometer wells and pressure gauge Pipe taps in all piping to and from the heat exchanger located as close to the heat exchanger as possible.

6. Provide necessary air vent valves for the heat exchanger so that it can be purged to prevent or relieve vapor or gas binding on either the tube side or shell side.

7. Provide adequate supports for mounting the heat exchanger so that it will not settle and cause piping strains. Foundation bolts should be set accurately. In concrete footings, pipe sleeves at least one pipe size larger than the bolt diameter slipped over the balt and cast in place are best for this purpose as they allow the bolt centers to be adjusted after the foundation has set.

8. Proper liquid level controls and relief valves and liquid level and temperature alarms, etc., should be installed.

9. Gauge glasses or liquid level alarms should be installed in all vapar or gas spaces to indicate any failure occurring in the condensate drain system and prevent flooding of the heat exchanger.

10. A surge drum should be installed upstream from the heat exchanger to guard against pulsation of fluids caused by pumps, compressors or other equipment.

11. Drain connections should not be piped to a common closed manifold so that it may be determined that the exchanger has been thoroughly drained.

INSTALLATION AT JOBSITE

CAUTION: Dress properly for the job. You may need any number of special items-safety hat, safety shoes, goggles, heavy gloves, ear protective devices, etc., for your own protection. Find out what items are required and wear therm.

1. On receipt of the heat exchanger at the jobsite, inspect for shipping damage to all protective covers. If damage is evident, inspect for possible contamination and replace protective covers as required. If damage is extensive, notify the carrier immediately.

2. Store under cover in a heated area, if possible.

3. If the heat exchanger must be stored for a period exceeding 30 days, precautions should be taken to prevent rusting or contamination. Following extended storage, it is suggested that the exchanger be thoroughly inspected prior to installation.

4. When installing, set heat exchanger level and square so that pipe connections can be made without forcing.

5. Before piping up, inspect all openings in the heat exchanger for foreign material. Remove all wooden Plugs, bags of desiccant and shipping covers immediately prior to installing. Do not expose internal passages at the heat exchanger to the atmosphere since moisture or harmful contaminants may enter the unit and cause severe damage to the system due to freezing and/or corrosion.

6. After piping is complete, if support cradles or feet are fixed to the heat exchanger, loosen foundation bolts at one end of the exchanger to allow free movement. Oversize holes in support cradles or feet are provided for this purpose.

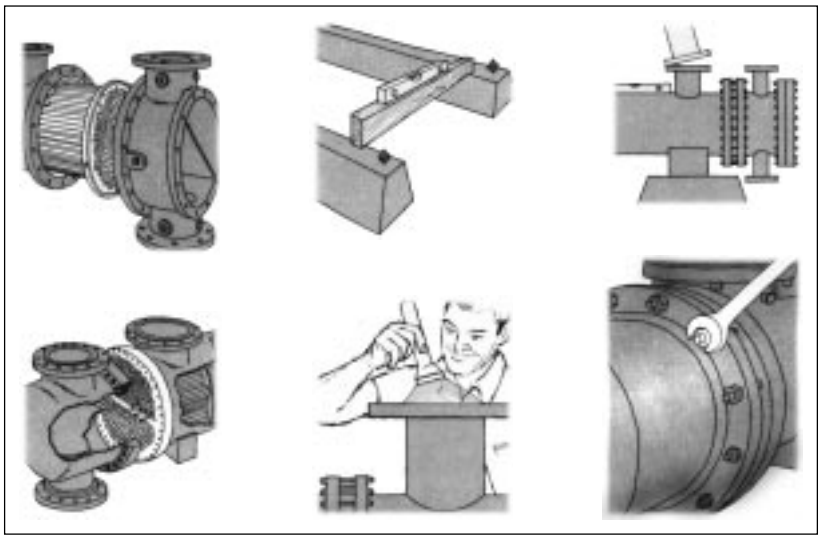

7. If heat exchanger shell is equipped with a bellows type expansion joint, remove shipping supports per instructions.

OPERATION

1. Be sure entire system is clean before starting operation to prevent plugging of tubes or shell side passages with refuse. The use of strainers or settling tanks in pipe lines leading to the heat exchanger is recommended.

2. Open vent connections before starting up.

CAUTION: A heat exchanger is a pressure vessel designed for operation at certain specific limits of pressure and temperature. The cooling or process system, which includes the heat exchanger, must be safeguarded with safety valves and controls so that these heat exchanger design conditions are not exceeded. All operating personnel should be made aware of these specific design pressures and temperatures.

3. Start operating gradually. See Table 1 for suggested startup and shutdown procedures for most applications. If in doubt, consult FLOVEX Technical office for specific instructions.

4. After the system is completely filled with the operating fluids and all air has been vented, close all manual vent connections.

5. Bolting on all gasketed or packed joints should be retightened after the heat exchanger has reached operating temperatures to prevent leaks and gasket failures.

CAUTION: Many heat exchanger circulate fluids which are irritating or dangerous to the human system. These fluids could cause problems if bolted or threaded ionts are not maintaned in a leak-tight condition at operating pressures, temperatures and no-flow, ambient conditions. If fluids are not irritating or dangerous, a leak will at least cause a slippery situation on the floor below. Since one fluid the heat exchanger is at hingher temperatures, any leaks might cause burns.

6. Do not operate the heat exchanger under pressure and temperature canditions in excess at those specified on the name plate.

7. To guard against water hammer, condensate should be drained from steam heated exchangers and similar apparatus both when starting up and shutting down.

8. Drain all fluids when shutting down to eliminate possible freezing and corroding.

9. In all installations there should be no pulsation of fluids since this causes vibration and will result in reduced operating life.

Dimensioni e caratteristiche non impegnative. Tolleranze secondo norme. - Dimensions and characteristics of the catalogue are subject to change without notice. Clearances according to international standards.

FLOVEX S.p.A. - 20056 Grezzago (MI) - Via Abruzzi 4/6 - TEL. 02-920192.1 - FAX 02-92019239

MAINTENANCE

CAUTION: Do not remove channel covers, shell covers, floating head covers or bonnets until all pressure in the heat exchanger has been relieved and both shell side and tube side are completely drained.

1. Exchangers subject to fouling (scale, sludge deposits, etc.) should be cleaned periodically depending on specific conditions. A light sludge or scale coating on either side at the tube greatly reduces its effectiveness. A marked increase in pressure drop and/or reduction in performance usually indicates cleaning is necessary. Since the difficulty of cleaning increases rapidly as the scale thickens or deposits increase, the intervals between cleanings should not be excessive.

2. Neglecting to keep tubes clean may result in random tube plugging. Consequent overheating or cooling at the plugged tubes, as compared to surrounding tubes, will cause physical damage and leaking tubes due to differential thermal expansion of the metals.

3. To clean or inspect the inside at the tubes, remove only the necessary tube side channel covers or bonnets depending on type of exchanger construction.

CAUTION: Since many of the removable components of the heat exchanger, particularly in the larger sizes, are too heavy for men to handle, care must be used to take this weight with proper rigging to avoid injury. Wear hard hats and safety shoes as required.

4. If the heat exchanger is equipped with zinc wasting pencils or plates, replace these as required.

5. To clean or inspect the outside of the tubes, it may be necessary to remove the tube bundle. (Fixed tubesheet exchanger bundles are non-removable.)

6. Some suggested methods at cleaning either the shell side or tube side are listed below:

…Circulating hot wash oil or light distillate through tube side or shell side will usually effectively remove sludge or similar soft deposits.

…Soft salt deposits may be washed out by circulating hot fresh water.

…Some commercial cleaning compounds such as "Oakite" or "Dowell" may be effective in removing the more stubborn depasits. Use in accardance with the manufacturer's instructions.

CAUTION:When the heat exchanger is cleaned, it is important that full characteristics of the fouling material and care exercised in handling them according to instructions. Use eye protection to prevent damage to your eyes. Wear a respirator when required.

7. If the heat exchanger has been in service for a considerable length at time without being removed, it may be necessary to use a jack on the floating tubesheet to break the bundle free.

…A good-sized steel bearing plate should be used with a filler board between the tubesheet face and bearing plate to protect the tube ends.

8. Tube bundles may be lifted horizontally by means of a cradle formed by bending a light-gauge plate or plates into a U shape. Attachments are made in the legs at the U for lifting.

9. Bundles should not be dragged since baffles or support plates may become easily bent. Any damage to baffles must be avoided so that the heat exchanger will function properly.

10. Following are safe loads for rods and eyebolts:

RODS			EYEBOLTS	
size tubes	size rods	safe load per rod	size	safe load
5/8"	3/8"	1,000 lbs	3/4"	4,000 lbs
3/4"	1/2"	2,000 lbs	1"	6,000 lbs
1" or			1¼"	10,000 lbs
larger	5/8"	3,000 lbs	1½"	15,000 lbs

11. When removing tube bundles from heat exchangers for inspection or cleaning, care should be exercised to see that they are not damaged by improper handling.

…The weight of the tube bundle should not be supported on individual tubes but should be carried by the tubesheets, support or baffle plates or on blocks con toured to the periphery of the tube bundles.

…Do not handle tube bundles with hooks or other tools which might damage tubes. Tube bundles should be moved about on cradles or skids.

…To withdraw tube bundles, il is recommended that rods be passed through two or more of the tubes and the load taken on the floating tubesheet.

…Rods should be threaded at both ends and provided with nuts and should pass through a steel bearing plate at each end of the bundle.

…A soft wood filler board should be inserted between the bearing plate and tubesheet face to prevent damage to the tube ends.

…Forged steel eyebolts should be screwed into both bearing plates for pulling and lifting.

…As an alternate to the rods, a steel cable can be threaded through one tube and returned through another tube.

…A hardwood spreader block must be inserted between the cable and the floating tubesheet to prevent damage to the tube ends.

12. Do not attempt to clean tubes by blowing steam through individual tubes. This overheats the individual tube and results in severe expansion strains and leaking tube to tubesheet joints.

CAUTION: Do not blow out heat exchangers with air when the normal process fluids or the cleaning fluids being handled are inflamamable.

13. To locale ruptured or corroded tubes or leaking joints between tubes and tube sheets, the following procedure is recommended;

…Remove tube side channel covers or bonnets.

…Pressurize the shell side of the exchanger with a cold liquid, preferably water.

…Observe tube joints and tube ends for indication of test fluid leakage.

14. With certain styles of exchangers, it will be necessary to buy or make a test ring to seal off the space between the floating tubesheet and shell inside diameter to apply the test in paragraph 13. Cansult your nearest sales representative for reference drawings showing installation of a test ring in your heat exchanger.

15. To tighten a leaking tube joint, use a suitable parallel roller tube expander.

…Do not rol tube beyond the back face of the tubesheet. Maximum rolling depth should be tubesheet thickness minus 1/8".

…Do net reroll tubes which are not leaking since this needlessly thins the tube wall.

16. It is recommended that when a heat exchanger is dismantled, new gaskets be used in reassembly.

…Camposition gaskets become brittle and dried out in service and do not provide an effective seal when reused.

…Metal or metal jacketed gaskets in initial compression match the contact surfaces and tend to work harden and cannot be recompressed on reuse.

17. Use of new bolting in conformance with dimensions and ASTM specifications of the original design is recommended where frequent dismantling is encountered.

FLOVEX S.p.A. - 20056 Grezzago (MI) - Via Abruzzi 4/6 - TEL. 02-920192.1 - FAX 02-92019239

GENERAL INFORMATION OPERATING AND MAINTENANCE OF HEAT EXCHANGERS

TABLE 1
RECOMMENDED START-UP AND SHUT-DOWN PROCEDURES
Caution: Every effort should be made to avoid subjecting the unit to thermal shock, overpressure and/or hydraulic hammer, since these conditions may impose stresses that exceed the mechanical strength ot the unit or the system in which it is installed which may result in leaks and/or other damage to the unit and/ar system.

Heat Exchanger Type of Costruction	Fluid Location & relative Temp.				Start-Up Procedure	Shut-Down Procedure
	Shell side		Tube side			
	Type of Fluid	Rel. Temp.	Type of Fluid	Rel. Temp.		
Fixed Tubesheet (Non removable) Bundle	Liquid	Hot	Liquid	Cold	Start both fluids gradually at the same time	Shut down both fluids gradually at the same time
	Condensing Gas (i.e. Steam)		Liquid or Gas		Start hot fluid first, then hot fluid	Shut down cold fluid first, then hot fluid
	Gas		Liquid		Start cold fluid firs, then hot fluid	Shut down coid fiuid gradualiy then hot fluid
	Liquid	Cold		Hot	Start both flows gradually at the same time	Shut down both fluids gradually at the same time
			Gas		Start cold fluid firs, then hot fluid	Shut down hot fluid first, then cold fluid
U-Tube Packed Floating Head Packed Floating Tubesheet Internal Floating Heat (All these types have Removable Bundles)	Liquid	Hot	Liquid	Cold	Start cold fluid firs, then start hot fluid gradually	Shut down hot fluid first, then cold fluid
	Condensing Gas (i.e. Steam)		Liquid or Gas			Shut down cold fluid first, then shut down hot fluid gradually
	Gas		Liquid			Shut down hot fluid first, then cold fluid
	Liquid	Cold		Hot		
			Gas			

General Comments:
1) *In all start-up and shut-down operations, fluid flows should be regulated so as to avoid thermal shocking the unit regardless of whether the unit is of either a removable or non-removable type construction.*
2) *For fixed tubesheet (non-removable bundle) type units where the tube side fluid cannot be shut down, it is recommended that (1) A bypass arrangement be incorporated in the system, and (2) The tube side fluid be bypassed before the shell side fiuid is shut down.*

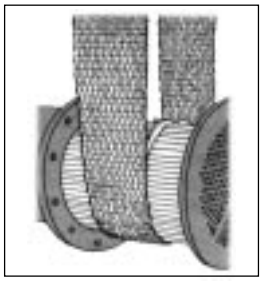
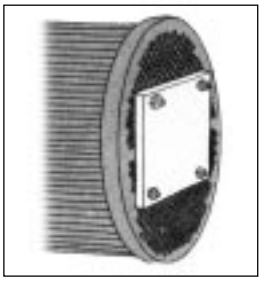

Dimensioni e caratteristiche non impegnative. Tolleranze secondo norme. - *Dimensions and characteristics of the catalogue are subject to change without notice. Clearances according to international standards.*

FLOVEX S.p.A. - 20056 Grezzago (MI) - Via Abruzzi 4/6 - TEL. 02-920192.1 - FAX 02-92019239

Filtri per olio *Lube oil filters*

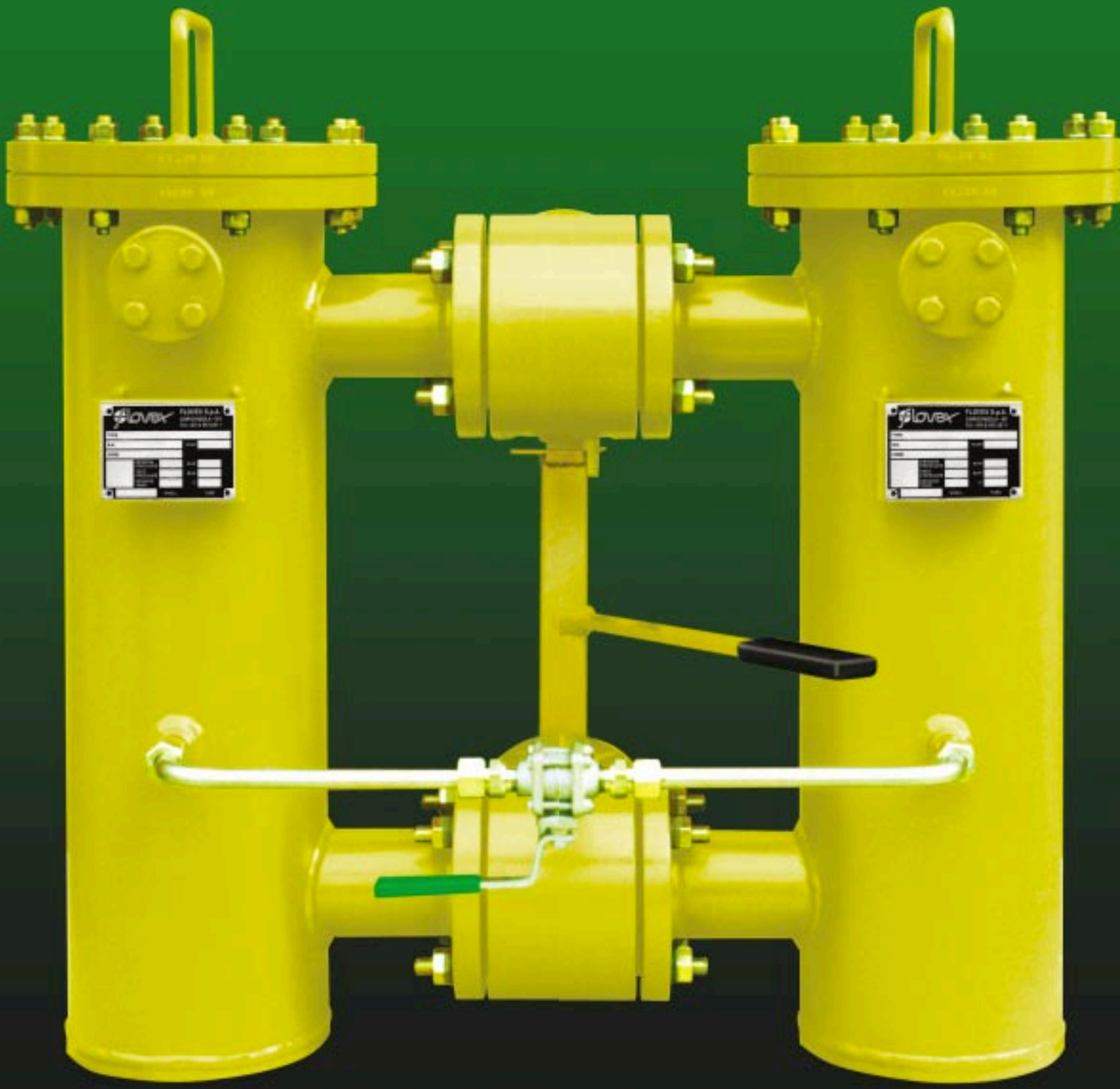

FLOVEX

FLOVEX S.p.A.
Via Abruzzi, 4/6 - 20056 GREZZAGO (MI) ITALY
Tel. +39 02 920192.1 r.a. - Fax +39 02 92019239
E- mail: flo@flovex.it - www.flovex.it

AZIENDA CON SISTEMA QUALITÀ
CERTIFICATO DA DNV
UNI EN ISO 9001

Fin dalla sua fondazione, 1977, la Flovex ha operato con professionalità nel campo degli scambiatori di calore per oleodinamica e lubrificazione.

Nel mondo stanno funzionando più di 100.000 impianti con scambiatori Flovex.

Una forte tendenza a seguire le richieste del mercato e dei clienti ha permesso a Flovex di espandersi durante gli anni sia in Italia che in numerosi Paesi europei distinguendosi per la sua alta qualità (ISO 9001) e la certificazione ASME (U-STAMP).

La medesima qualità è stata posta nella progettazione e costruzione della nuova linea FILTRI per olio DUPLEX e singoli.

Il nostro standard di costruzione è in accordo ad ASME VIII DIV. 1 ed API 614.

Vengono normalmente impiegati acciaio al carbonio ed acciaio inossidabile nei vari gradi richiesti.

Tutti gli apparecchi vengono collaudati secondo il nostro sistema di qualità ISO 9001. Secondo le normative e le esigenze necessarie si eseguono anche collaudi con Enti riconosciuti come LL.RR., B.V., DNV,… e la stampigliatura U-STAMP.

La Flovex utilizza cartucce filtro dei più qualificati costruttori per rispettare i valori di filtrazione richiesti.

Since is foundation, 1977, Flovex has been operating with authority in the field of heat exchangers lubrification systems.

More than 100.000 implants are working in the world with our heat exchangers.

A strong orientation of the market and of the costumer requirements has allowed Flovex to expand over the years both on the national territory and in many European countries with a continuous track record of high quality (ISO 9001) and certification ASME (U-STAMP).

The same quality was used in projecting an constructing the new family of DUPLEX or single FILTERS for oil.

Our standard of construction is according to ASME VIII Div. 1 and API 614 codes.

Carbon steel and stainless steel are the materials usually used.

All the manufactures are tested according to our quality system ISO 9001.
According to the codes and necessities even tests by LL.RR., B.V., DNV,… and U-STAMP are done.

Flovex uses cartdriges of the most qualified factories to respect the values of filtration requested.

FLOVEX

ASME

U

Filtro per olio DFX Lube oil filter

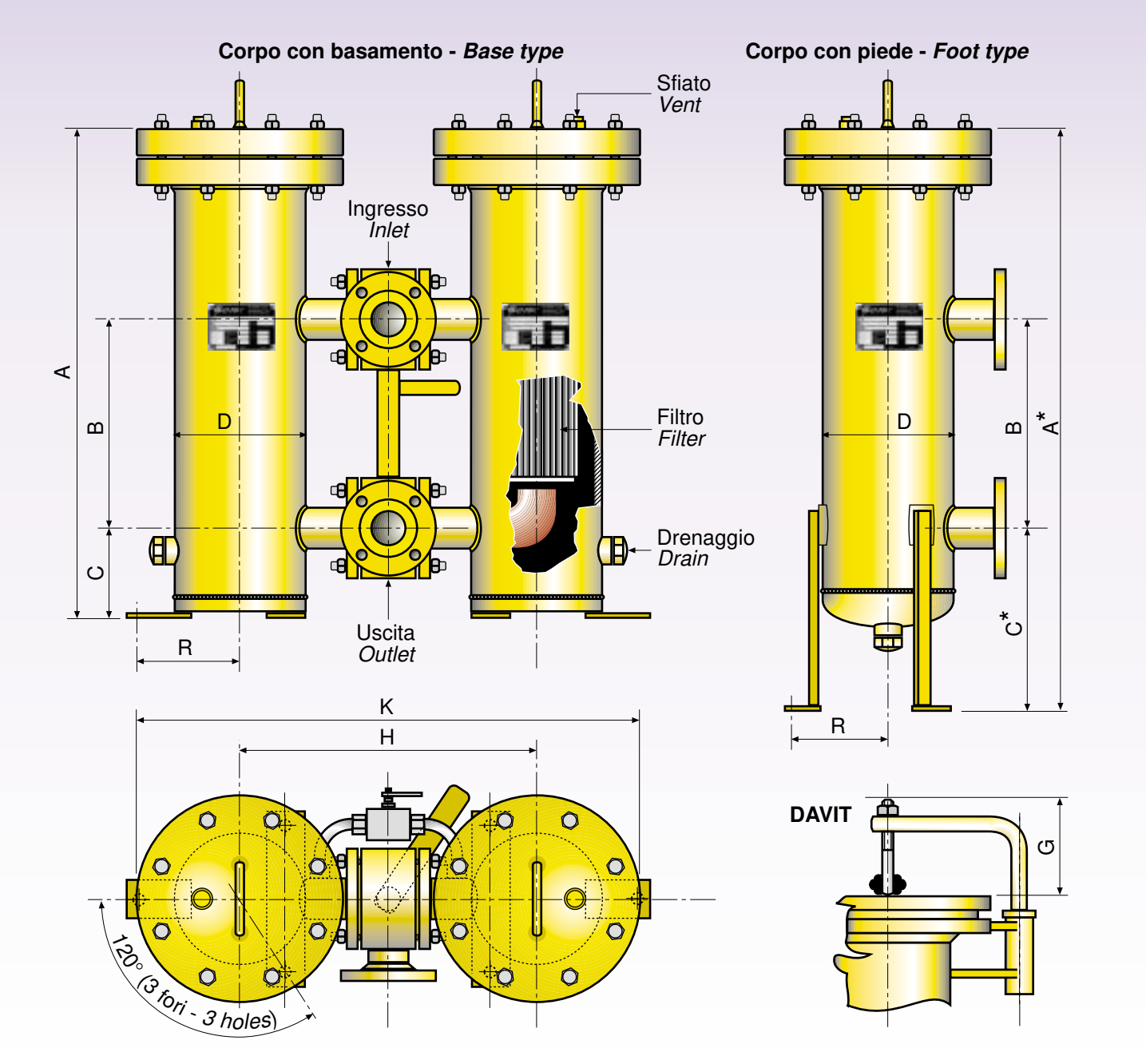

TAGLIA *size*	IN / OUT	Portata max *Max flow* lt/min	A	A*	B	C	C*	D	H	K	R	G
DFX 0410	1 1/2"	230	675	900	330	140	365	141	476	680	100	-
DFX 0820	2	380	770	1020	330	140	390	219	492	800	150	-
DFX 0830	3	840	995	1245	350	140	390	219	522	830	150	-
DFX 1240	4	1480	1105	1455	400	185	535	323	715	1135	230	50
DFX 1260	6	2700	1160	1510	600	185	535	323	827	1250	230	50
DFX 1680	8	4500	1175	1555	600	210	590	406	820	1330	260	50

- Portata max di olio tipo ISO VG32
- Codice di costruzione: ASME VIII Div. 1 - API 614
- Esecuzione flangiata a 3 vie con sfera in acciaio inox
- Sfiati e drenaggio: Ø 1/2" NPT-F
- Tubazione di by-pass Ø 1/2" con valvola
- Sistema DAVIT secondo codice

- *Max flowrate of oil ISO VG32 type*
- *Costruction code: ASME VIII Div. 1 - API 614*
- *3 way flanged esecution with int. boll 316 in stainl.steel*
- *Vent & drain: Ø 1/2" NPT-F*
- *By-pass tubing Ø 1/2" with bool valve*
- *DAVIT system according code*

I dati indicati in questo catalogo non sono impegnativi, e la Flovex allo scopo di migliorare la propria produzione si riserva il diritto di apportare modifiche in qualsiasi momento e senza alcun preavviso.

The information shown in the catalogue are not binding and in order to improve production, Flovex reserves the right to make any changement (including sizing) considered necessary at anytime and without previous notice.

Emiss. 01-2002

Filtri e scambiatori di calore per impieghi industriali

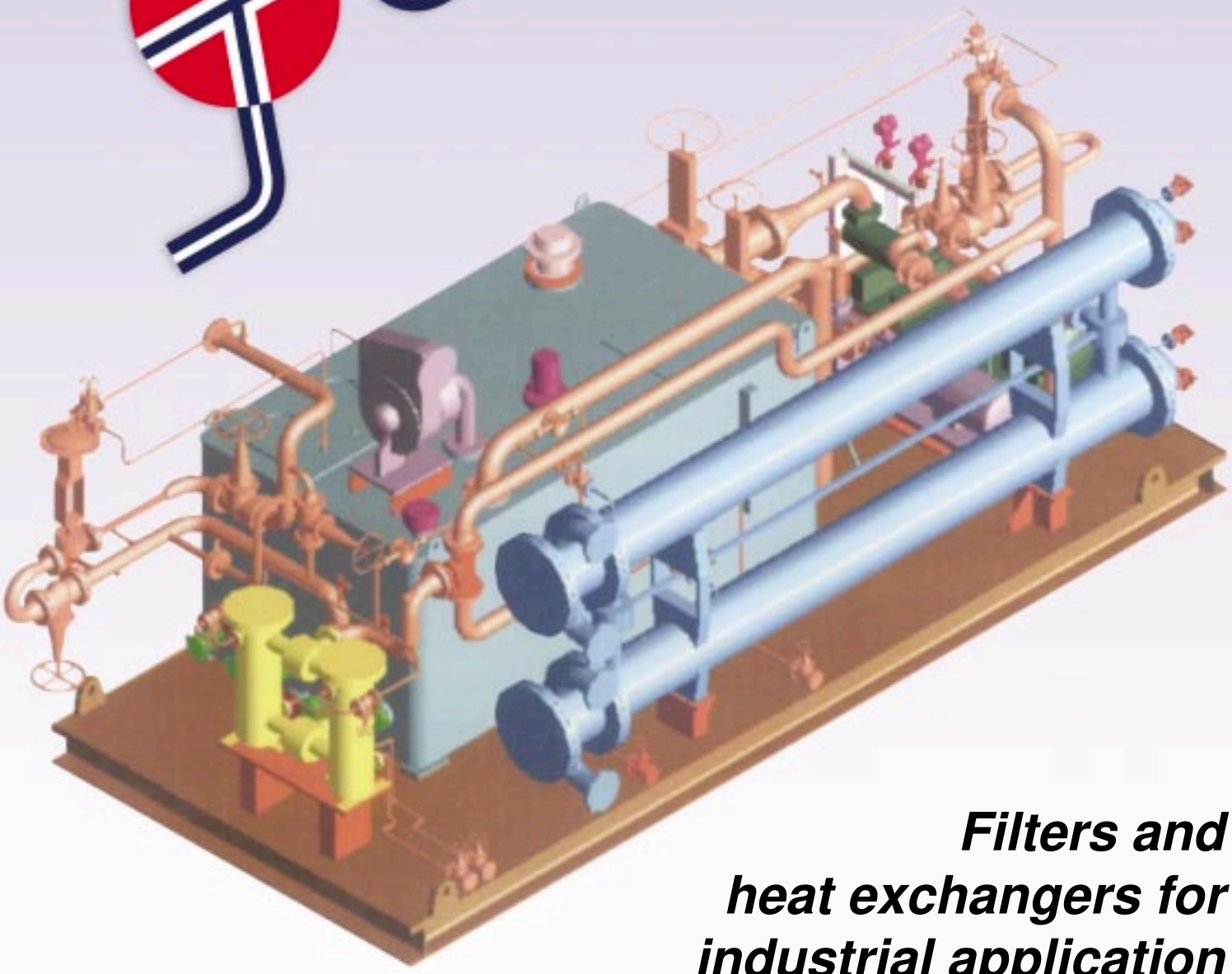

Filters and heat exchangers for industrial application

FLOVEX

FLOVEX S.p.A.
Via Abruzzi, 4/6 - 20056 GREZZAGO (MI) ITALY
Tel. + 39 02 920192.1 r.a. - Fax + 39 02 92019239
E- mail: flo@flovex.it - www.flovex.it