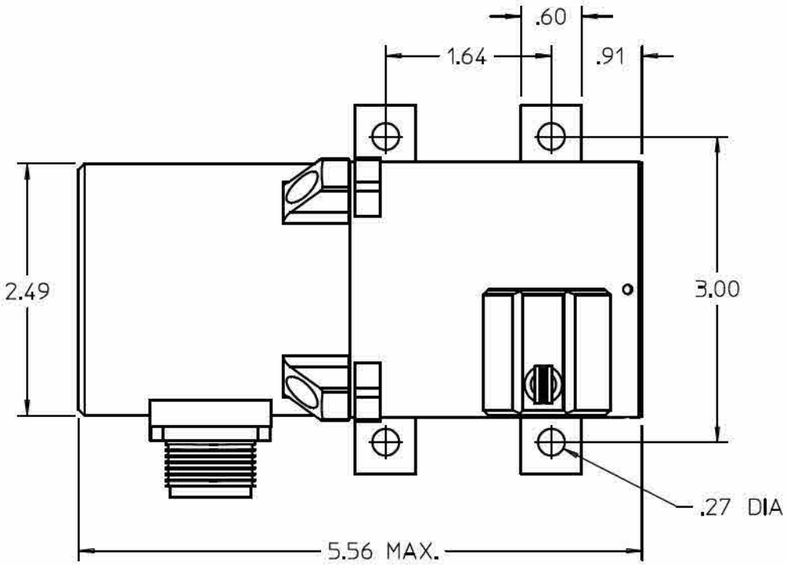

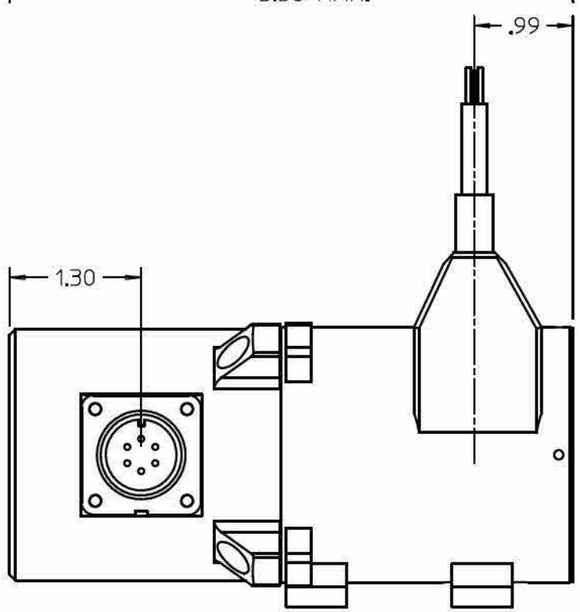

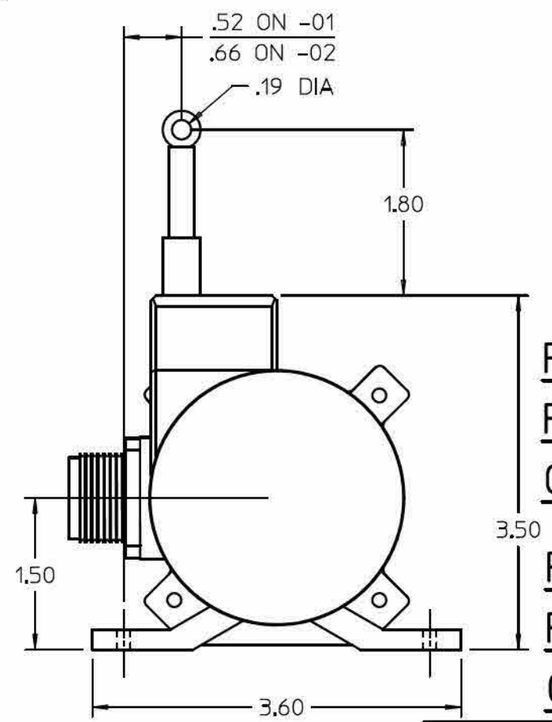

SPECIFICATIONS:

OUTPUT SIGNAL ---------- 4-20 mA
ACCURACY ---------- ±.18%
REPEATABILITY ---------- ±.05% FULL STROKE
MEASURING CABLE ---------- NYLON COATED STAINLESS STEEL
ENCLOSURE MATERIAL ---------- STAINLESS STEEL
SENSOR ---------- PLASTIC HYBRID PRECISION POTENTIOMETER
WEIGHT ---------- 6 LBS MAX.
OUTPUT CALIBRATION ---------- 20 MA AT MIN CABLE EXTENSION
---------- 4 MA AT MAX CABLE EXTENSION
INPUT VOLTAGE ---------- 12 TO 40 VDC
INPUT CURRENT ---------- 20 mA, MAX.
IMPEDANCE ---------- 100 MOHM @ 100 VDC

ENCLOSURE DESIGN ---------- NEMA 4X, 6, IP67
HAZARDOUS AREA CERTIFICATION -------- CLASS 1 GROUPS A,B,C,D
---------- CSA 22.2
OPERATING TEMPERATURE ---------- -40°F TO 200°F

MANUFACTURER: CELESCO TRANSDUCER PRODUCTS
(800) 423-5483 (818) 884-6860

*** **IMPORTANT:** TRANSDUCER TO BE ORDERED WITH SWIVEL (9000480-0013) AND CLIP (9000480-0014).

PART No.: 1025888-01
PART NAME: LIFT POSITION TRANSDUCER
CELESCO PART No.: PT8420-0030-311-1610

PART No.: 1025888-02
PART NAME: LIFT POSITION TRANSDUCER
CELESCO PART No.: PT8420-0050-311-1610

					4	DO NOT SCALE PRINTS		FILE SPEC. 1025888	REF. FROM	
					3	DATE	1-4-00	CABLE-EXTENSION POSITION TRANSDUCER	A.D.N.	
					2	DRAWN	DSB			
INITIAL RELEASE					1	CHECK'D	DLH		DWG. No. 1025888	REV 1
REVISION	EN	BY	APPR.	DATE		APPR.	DLH			